2020 Ninja® ZX™-6R PARTS DIAGRAM

Accessory(Pillion Seat Cover)

F2910A

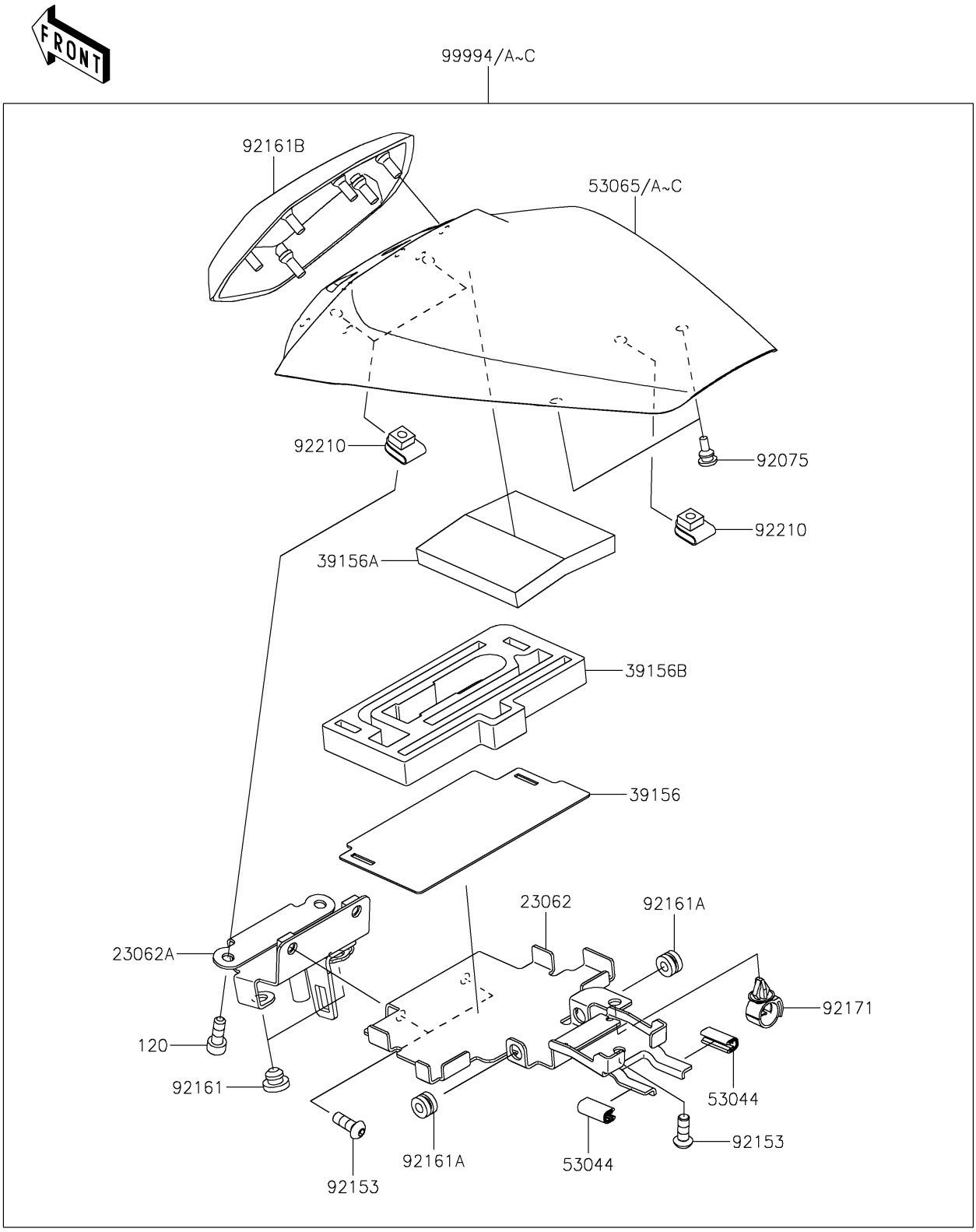

© 2025 Kawasaki Motors Corp., U.S.A.

2020 Ninja® ZX™-6R PARTS LIST

Accessory(Pillion Seat Cover)

ITEM NAME	PART NUMBER	QUANTITY
BRACKET-COMP (Ref # 23062)	23062-1162	1
BRACKET-COMP (Ref # 23062A)	23062-1184	1
PAD (Ref # 39156)	39156-2365	1
PAD (Ref # 39156A)	39156-2366	1
PAD (Ref # 39156B)	39156-2367	1
TRIM,L=20 (Ref # 53044)	53044-0021	2
COVER SEAT,C.S.F.ORANGE (Ref # 53065A)	53065-0038-62J	1
DAMPER,6X10X15 (Ref # 92075)	92075-1808	2
BOLT,SOCKET,6X16 (Ref # 92153)	92153-1785	3
DAMPER (Ref # 92161)	92161-1084	2
DAMPER (Ref # 92161A)	92161-1350	2
DAMPER,SEAT PAD (Ref # 92161B)	92161-1812	1
CLAMP,13MM DIA. (Ref # 92171)	92171-1415	1
NUT,6MM (Ref # 92210)	92210-0277	3
PILLION SEAT COVER,C.S.F.ORG (Ref # 99994A)	99994-1116-62J	1
BOLT-SOCKET,6X16 (Ref # 120)	120CA0616	2

© 2025 Kawasaki Motors Corp., U.S.A.