2021 MULE SX™ 4x4 SE FI PARTS DIAGRAM

Front Hubs/Brakes

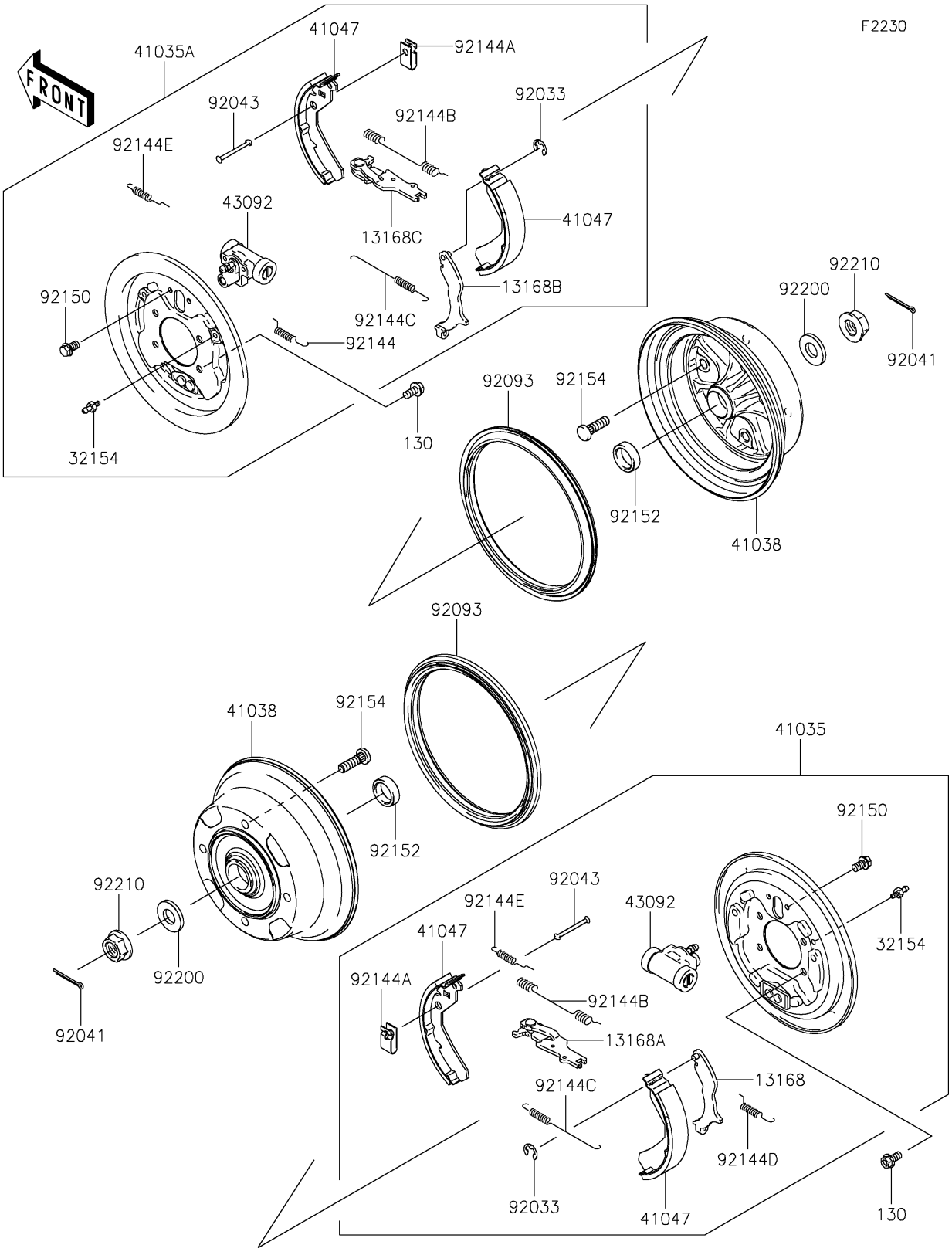

© 2024 Kawasaki Motors Corp., U.S.A.

2021 MULE SX™ 4x4 SE FI PARTS LIST

Front Hubs/Brakes

ITEM NAME	PART NUMBER	QUANTITY
LEVER,BRAKE,LH (Ref # 13168)	13168-0065	1
LEVER,BRAKE,LH (Ref # 13168A)	13168-0066	1
LEVER,BRAKE,RH (Ref # 13168B)	13168-0067	1
LEVER,BRAKE,RH (Ref # 13168C)	13168-0068	1
PIPE (Ref # 32154)	32154-0335	2
PANEL-ASSY-BRAKE,FR,LH (Ref # 41035)	41035-0720	1
PANEL-ASSY-BRAKE,FR,RH (Ref # 41035A)	41035-0721	1
DRUM,FRONT BRAKE (Ref # 41038)	41038-0013	2
SHOE-ASSY-BRAKE (Ref # 41047)	41047-0001	4
CYLINDER,BRAKE (Ref # 43092)	43092-0003	2
RING-SNAP (Ref # 92033)	92033-1279	2
COTTER,4.0X35 (Ref # 92041)	92041-1053	2
PIN,SHOE HOLD (Ref # 92043)	92043-1460	4
SEAL,BS184.8X13.5-1 (Ref # 92093)	92093-0031	2
SPRING,RH (Ref # 92144)	92144-1608	1
SPRING,SHOE HOLD (Ref # 92144A)	92144-1609	4
SPRING,RETURN,UPP (Ref # 92144B)	92144-1612	2
SPRING,RETURN,LWR (Ref # 92144C)	92144-1613	2
SPRING,LH (Ref # 92144D)	92144-1614	1
SPRING (Ref # 92144E)	92144-1615	2
BOLT,FLANGED,6X10 (Ref # 92150)	92150-1664	4
COLLAR,25X34X10 (Ref # 92152)	92152-0164	2
BOLT,10X34.6 (Ref # 92154)	92154-1482	8
WASHER,18.5X38X4.5 (Ref # 92200)	92200-1794	2
NUT,FLANGED,18MM (Ref # 92210)	92210-0132	2
BOLT-FLANGED,8X16 (Ref # 130)	130CA0816	8

© 2024 Kawasaki Motors Corp., U.S.A.