2021 MULE SX™ 4x4 SE FI PARTS DIAGRAM

Front Fender(s)

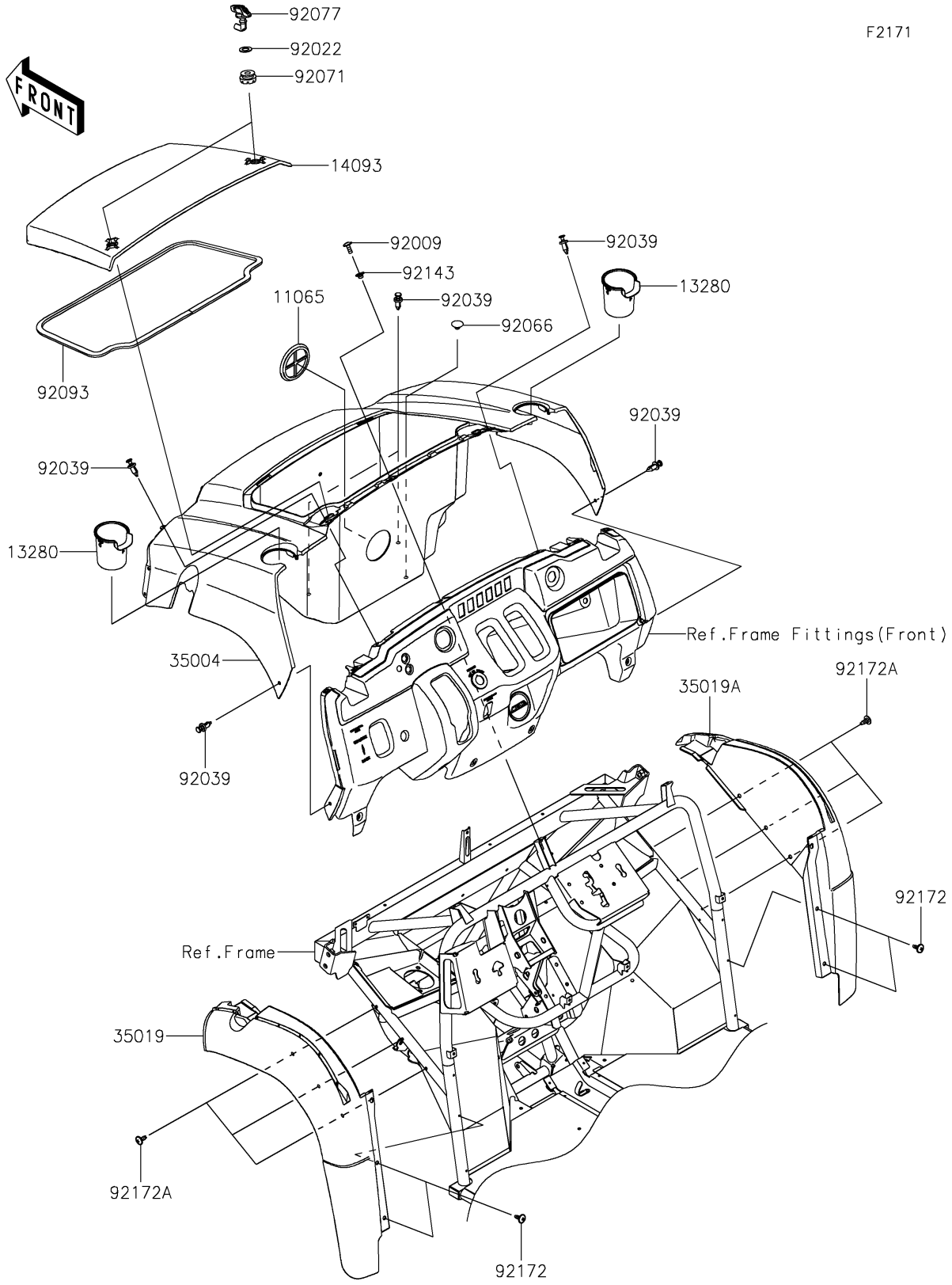

© 2024 Kawasaki Motors Corp., U.S.A.

2021 MULE SX™ 4x4 SE FI PARTS LIST

Front Fender(s)

ITEM NAME	PART NUMBER	QUANTITY
CAP,F.BLACK (Ref # 11065)	11065-1053-6Z	1
HOLDER (Ref # 13280)	13280-0879	2
COVER,HOOD,B.WHITE (Ref # 14093)	14093-0390-266	1
FENDER-FRONT,B.WHITE (Ref # 35004)	35004-0355-266	1
FLAP,LH (Ref # 35019)	35019-0608	1
FLAP,RH (Ref # 35019A)	35019-0609	1
SCREW,6X16 (Ref # 92009)	92009-1621	1
WASHER,12.5X22X1.2 (Ref # 92022)	92022-072	2
RIVET (Ref # 92039)	92039-0776	6
PLUG (Ref # 92066)	92066-1485	1
GROMMET (Ref # 92071)	92071-0746	2
KNOB (Ref # 92077)	92077-0033	2
SEAL,6X15X1755 (Ref # 92093)	92093-0688	1
COLLAR (Ref # 92143)	92143-1057	1
SCREW,6X16 (Ref # 92172)	92172-0711	4
SCREW,6X16 (Ref # 92172A)	92172-0826	6

© 2024 Kawasaki Motors Corp., U.S.A.