2020 TERYX4™ CAMO PARTS DIAGRAM

Ignition Switch

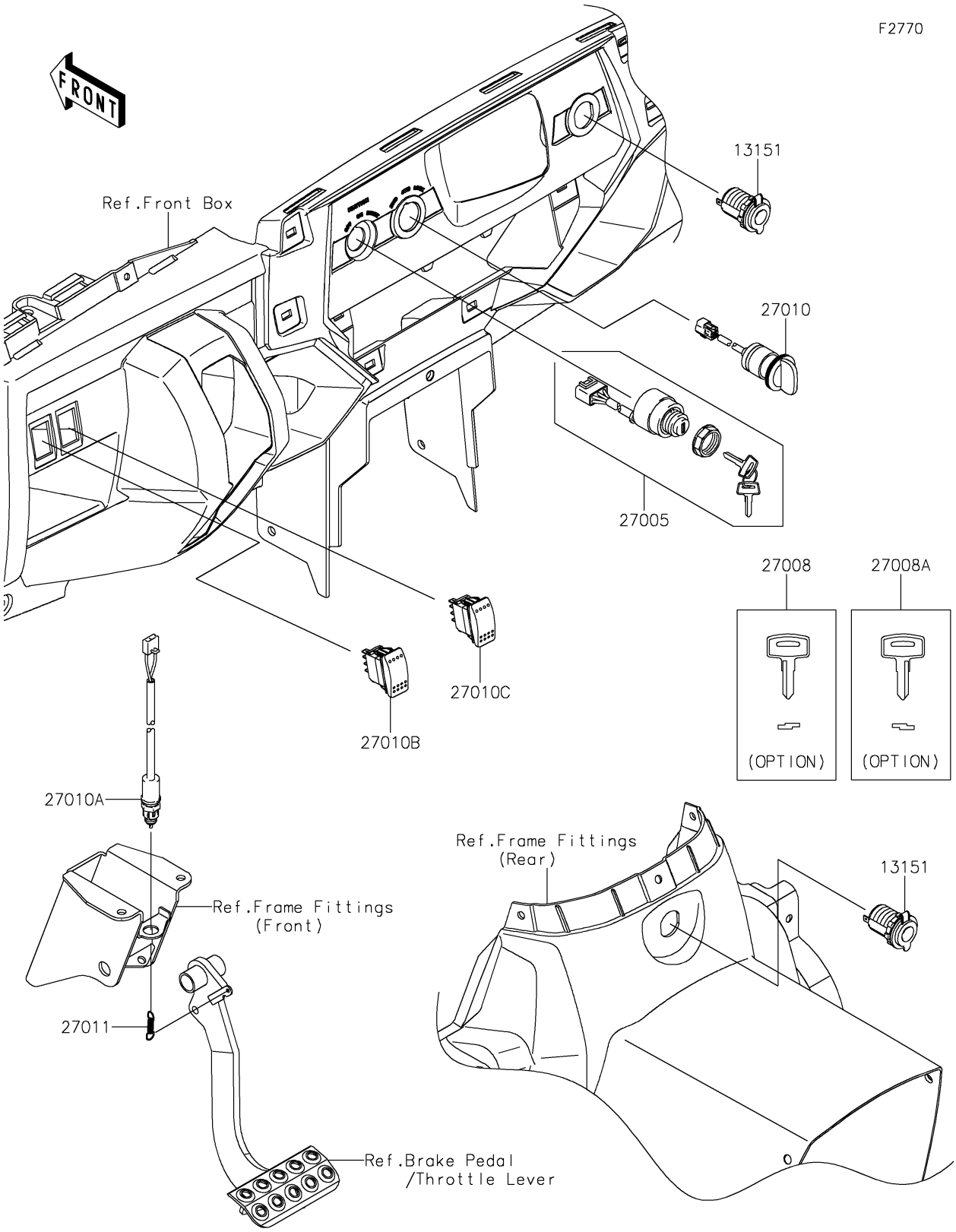

© 2024 Kawasaki Motors Corp., U.S.A.

2020 TERYX4™ CAMO PARTS LIST

Ignition Switch

ITEM NAME	PART NUMBER	QUANTITY
SWITCH-COMP,OUTLET,12V (Ref # 13151)	13151-0556	2
SWITCH-ASSY-IGNITION (Ref # 27005)	27005-0036	1
KEY-LOCK,BLANK (Ref # 27008)	27008-1153	1
KEY-LOCK,BLANK (Ref # 27008A)	27008-1157	1
SWITCH (Ref # 27010)	27010-0706	1
SWITCH,BRAKE (Ref # 27010A)	27010-0724	1
SWITCH,OUTER (Ref # 27010B)	27010-0806	1
SWITCH,OUTER (Ref # 27010C)	27010-0807	1
SPRING,BRAKE LAMP SWITCH (Ref # 27011)	27011-006	1

© 2024 Kawasaki Motors Corp., U.S.A.