2021 TERYX4™ LE PARTS DIAGRAM

Rear Suspension

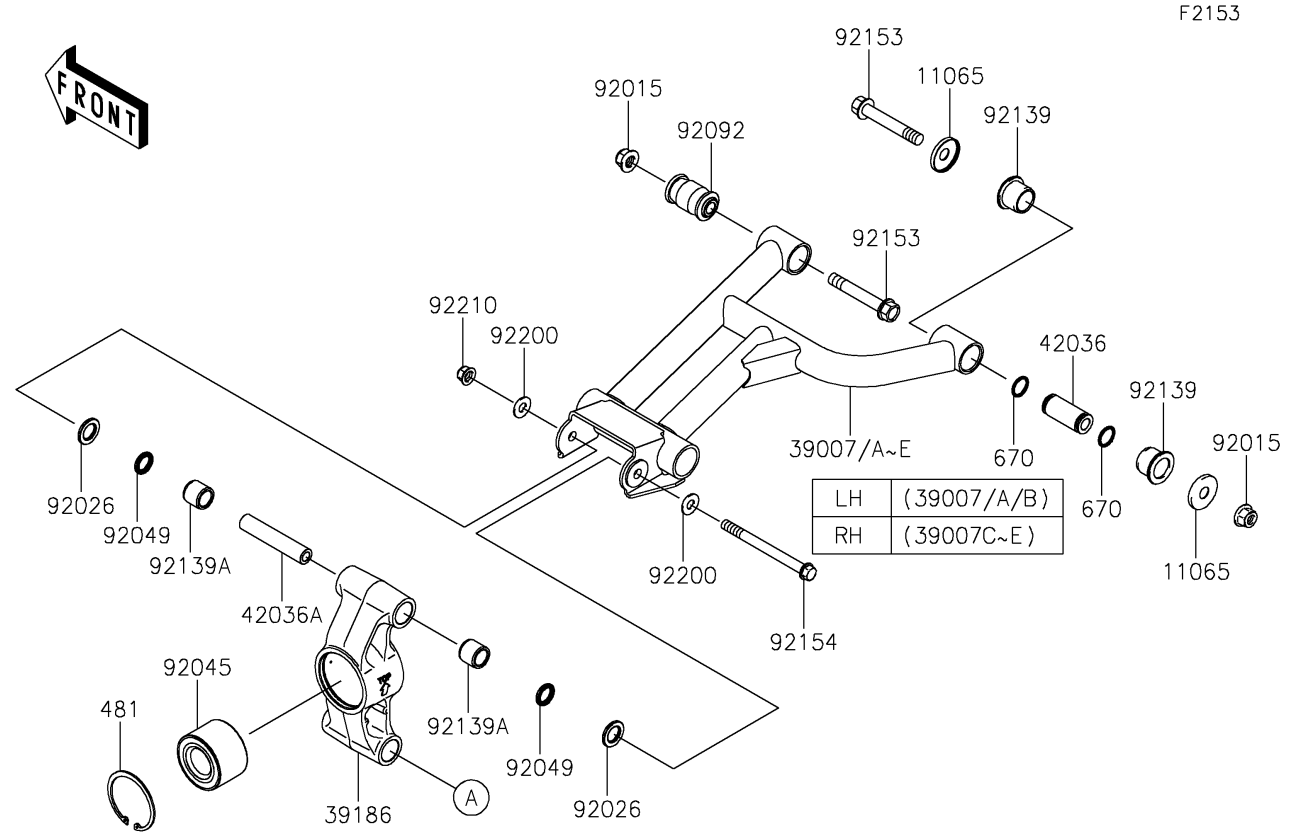

LH	(39007/A/B)
RH	(39007C~E)

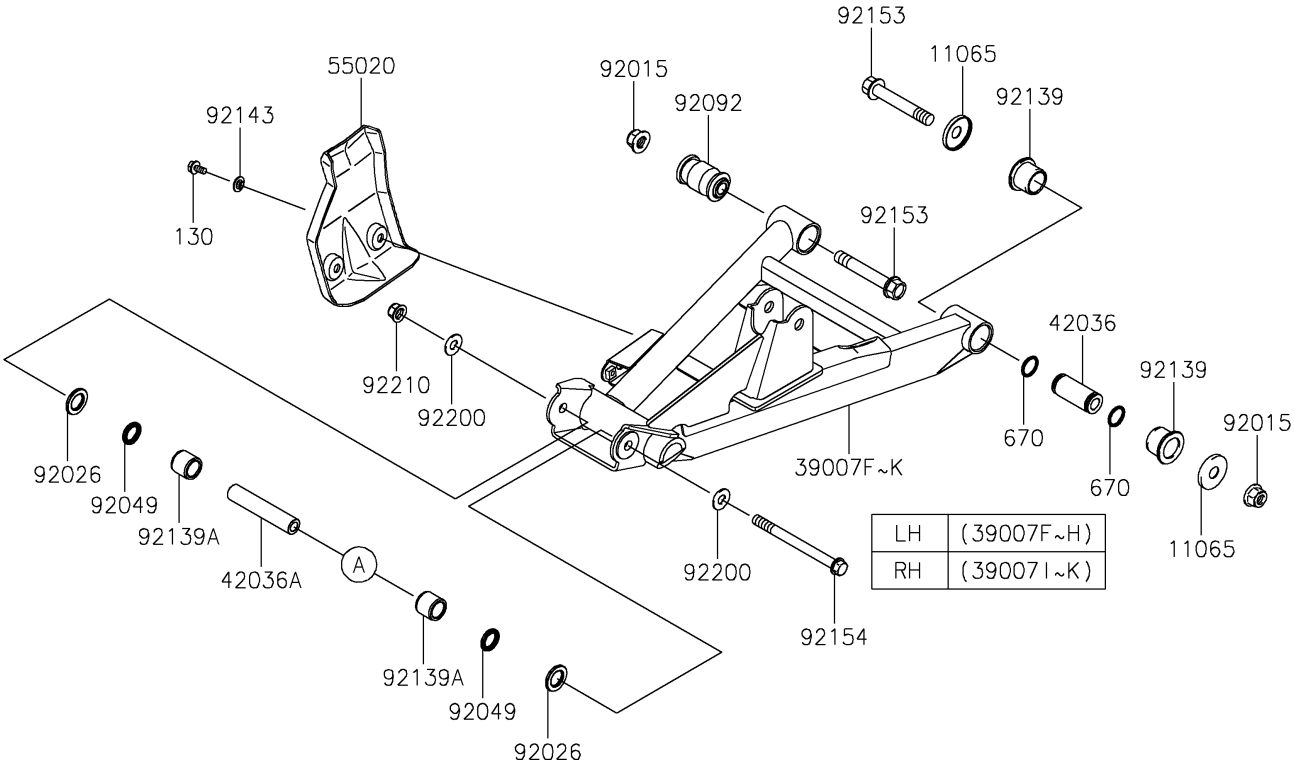

LH	(39007F~H)
RH	(39007I~K)

© 2024 Kawasaki Motors Corp., U.S.A.

2021 TERYX4™ LE PARTS LIST

Rear Suspension

ITEM NAME	PART NUMBER	QUANTITY

© 2024 Kawasaki Motors Corp., U.S.A.