2019 TERYX® LE PARTS DIAGRAM

Meter(s)

F2530

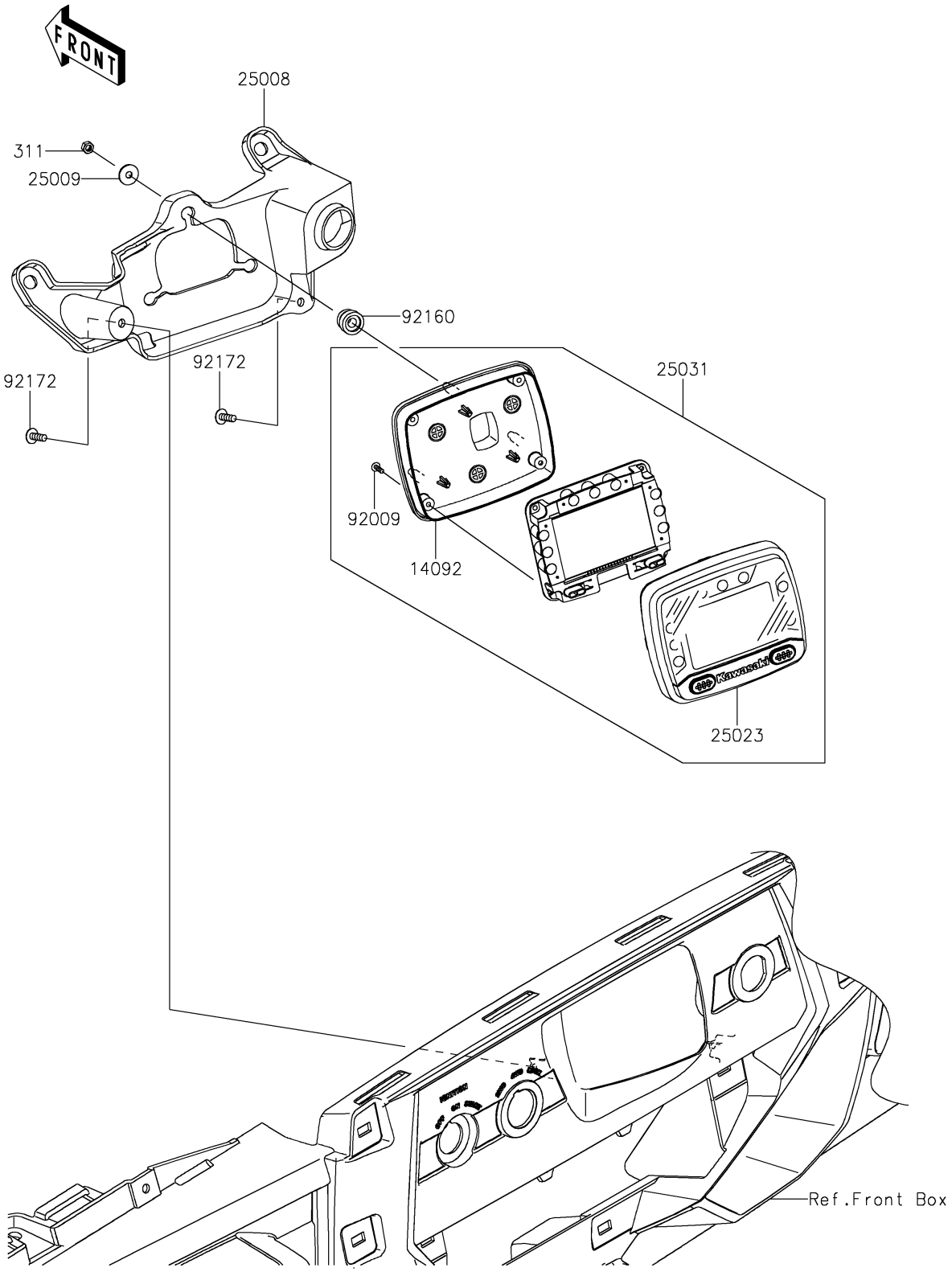

© 2024 Kawasaki Motors Corp., U.S.A.

2019 TERYX® LE PARTS LIST

Meter(s)

ITEM NAME	PART NUMBER	QUANTITY
COVER,METER,LWR (Ref # 14092)	14092-0834	1
BRACKET-METER (Ref # 25008)	25008-0043	1
WASHER,5.2X16X1.2 (Ref # 25009)	25009-004	3
COVER-METER CASE,UPP (Ref # 25023)	25023-0075	1
METER-ASSY,LCD (Ref # 25031)	25031-0692	1
SCREW,TAPPING,3X12 (Ref # 92009)	92009-1255	4
DAMPER (Ref # 92160)	92160-1460	3
SCREW,TAPPING,5X14 (Ref # 92172)	92172-0265	2
NUT-HEX,5MM (Ref # 311)	311AB0500	3

© 2024 Kawasaki Motors Corp., U.S.A.