2019 BRUTE FORCE® 750 4x4i EPS CAMO PARTS DIAGRAM

Oil Pump/Oil Filter

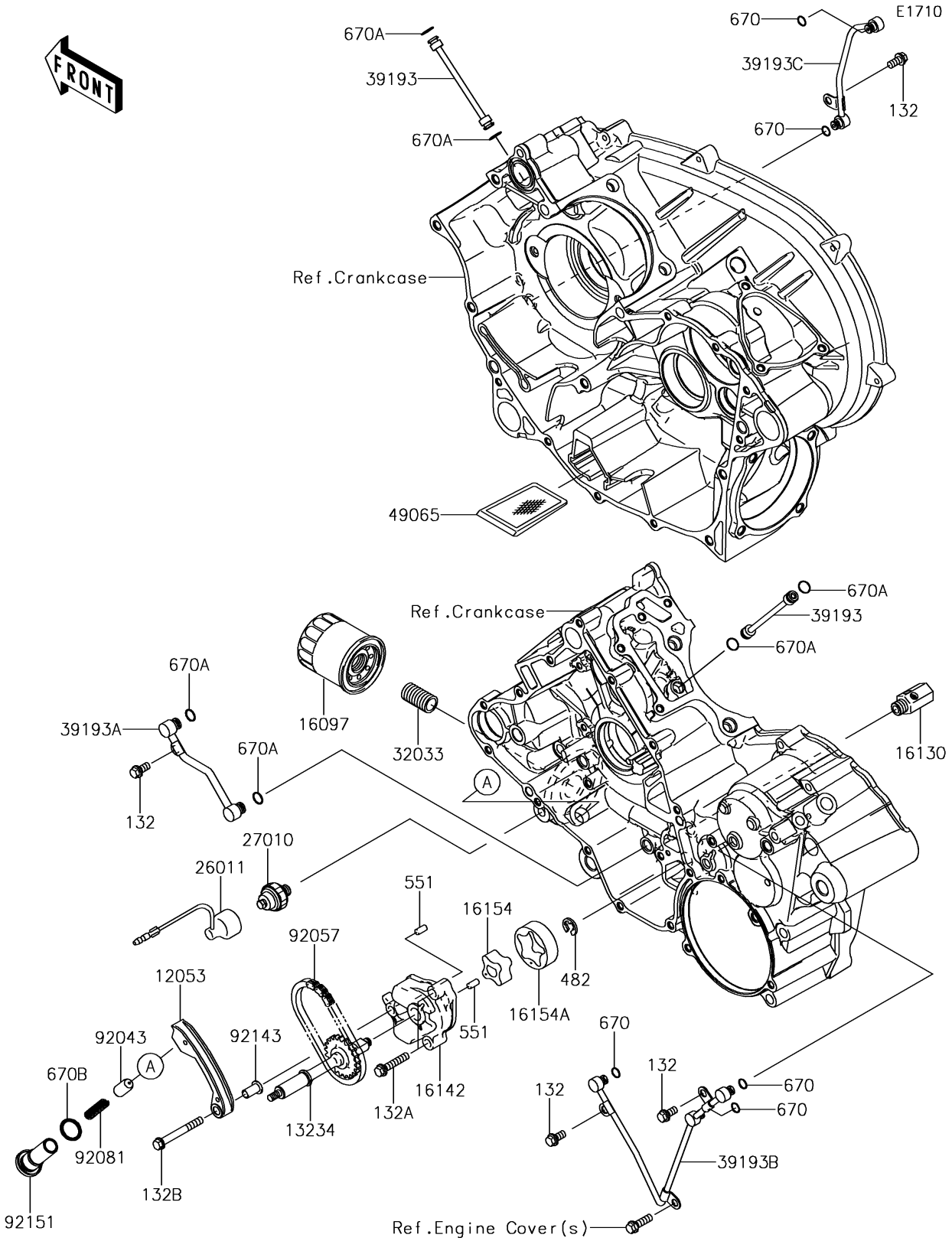

© 2024 Kawasaki Motors Corp., U.S.A.

2019 BRUTE FORCE® 750 4x4i EPS CAMO PARTS LIST

Oil Pump/Oil Filter

ITEM NAME	PART NUMBER	QUANTITY
GUIDE-CHAIN,SLACK (Ref # 12053)	12053-1440	1
BOLT-FLANGED-SMALL,6X12 (Ref # 132)	132BA0612	4
SHAFT-COMP,OIL PUMP (Ref # 13234)	13234-1112	1
BOLT-FLANGED-SMALL,6X30 (Ref # 132A)	132BA0630	2
BOLT-FLANGED-SMALL,6X50 (Ref # 132B)	132BB0650	1
FILTER-ASSY-OIL (Ref # 16097)	16097-0007	1
VALVE-ASSY-RELIEF (Ref # 16130)	16130-1058	1
COVER-PUMP (Ref # 16142)	16142-1162	1
ROTOR-PUMP,INNER (Ref # 16154)	16154-2059	1
ROTOR-PUMP,OUTER (Ref # 16154A)	16154-2060	1
WIRE-LEAD (Ref # 26011)	26011-1755	1
SWITCH,OIL PRESSURE (Ref # 27010)	27010-1313	1
PIPE,OIL FILTER (Ref # 32033)	32033-1535	1
PIPE-OIL,CRANKCASE-HEAD (Ref # 39193)	39193-0015	2
PIPE-OIL,CRANKSHAFT (Ref # 39193A)	39193-1052	1
PIPE-OIL,CRANKCASE,LH (Ref # 39193B)	39193-1053	1
PIPE-OIL,CRANKCASE,RH (Ref # 39193C)	39193-1054	1
CIRCLIP-TYPE-E,6MM (Ref # 482)	482J6000	1
FILTER-OIL (Ref # 49065)	49065-1086	1
PIN-DOWEL,4X8 (Ref # 551)	551A0408	2
O RING (Ref # 670)	670D1505	5
O RING,7MM (Ref # 670A)	670D1507	6
O RING,16MM (Ref # 670B)	670D2016	1
PIN (Ref # 92043)	92043-076	1
CHAIN,DID SCR-0409 SV (Ref # 92057)	92057-0188	1
SPRING (Ref # 92081)	92081-112	1
COLLAR (Ref # 92143)	92143-1857	1
BOLT,16X41 (Ref # 92151)	92151-1781	1

© 2024 Kawasaki Motors Corp., U.S.A.