2007 Prairie 360 4X4 Hardwoods Green HD PARTS DIAGRAM

Optional Parts(Battery)(CN)

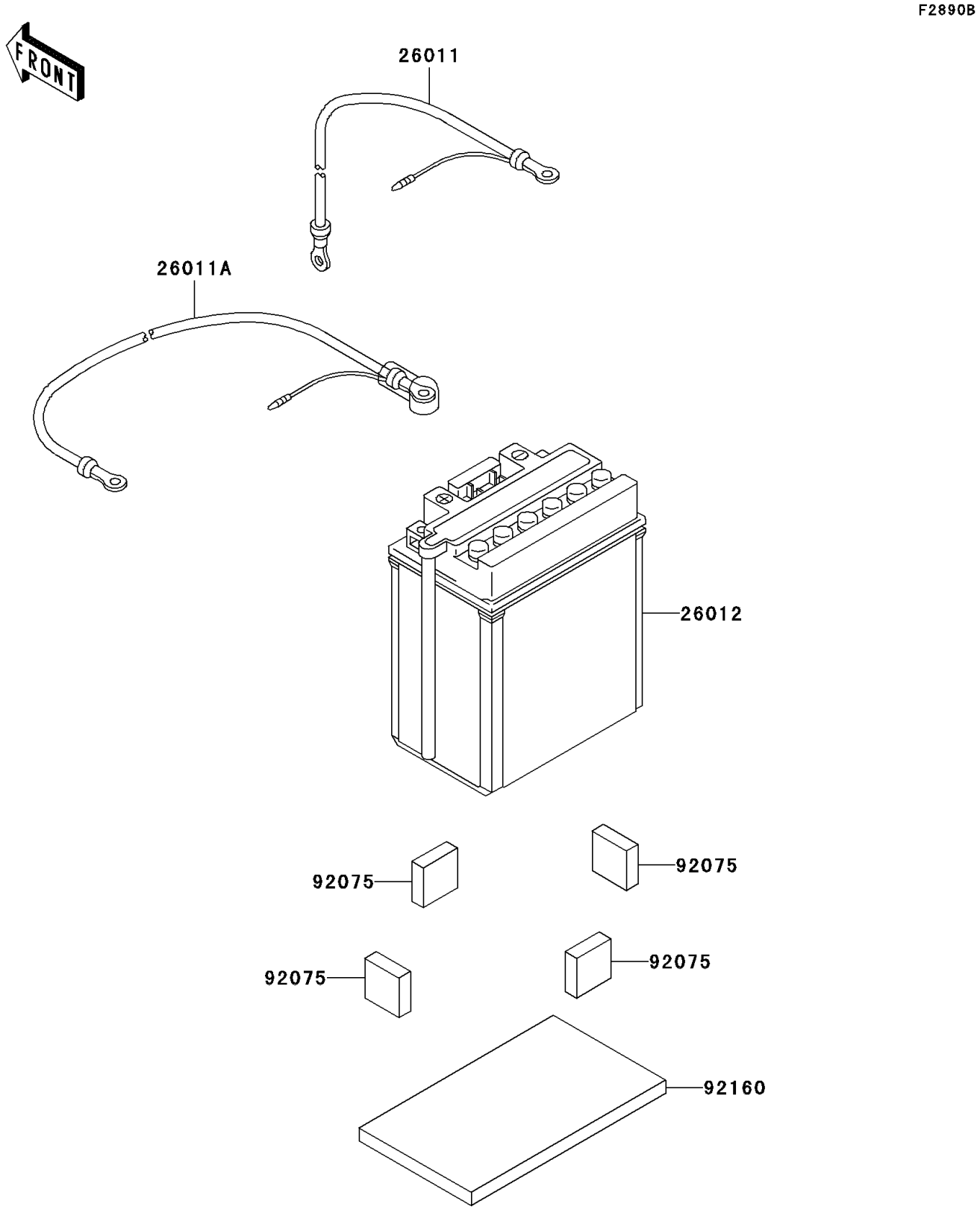

© 2025 Kawasaki Motors Corp., U.S.A.

2007 Prairie 360 4X4 Hardwoods Green HD PARTS LIST

Optional Parts(Battery)(CN)

ITEM NAME	PART NUMBER	QUANTITY
WIRE-LEAD,BATTERY(-) (Ref # 26011)	26011-1637	1
WIRE-LEAD,BATTERY(+) (Ref # 26011A)	26011-7504	1
BATTERY,YB16CL-B,12V 19AH (Ref # 26012)	26012-0004	1
DAMPER,FUEL TANK,RR (Ref # 92075)	92075-1483	4
DAMPER,BATTERY (Ref # 92160)	92160-1926	1

© 2025 Kawasaki Motors Corp., U.S.A.