2006 Brute Force 650 4x4

PARTS DIAGRAM

Optional Parts(Guard)

F2890

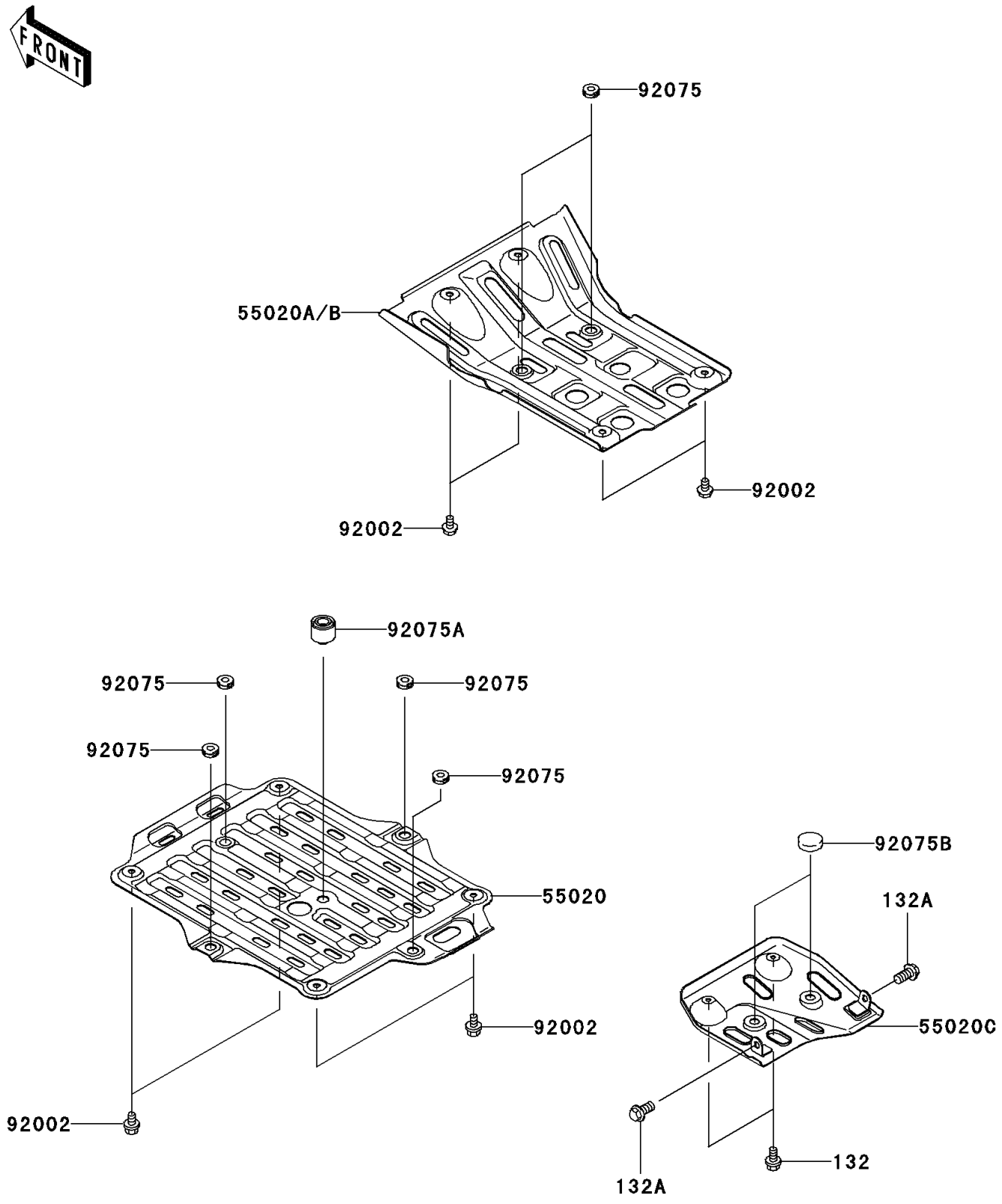

© 2026 Kawasaki Motors Corp., U.S.A.

2006 Brute Force 650 4x4

PARTS LIST

Optional Parts(Guard)

ITEM NAME	PART NUMBER	QUANTITY
BOLT-FLANGED-SMALL,6X12 (Ref # 132)	132BB0612	2
BOLT-FLANGED-SMALL,8X16 (Ref # 132A)	132BB0816	2
GUARD,ENGINE,UNDER (Ref # 55020)	55020-1712	1
GUARD,FRONT SKID,F.BLACK (Ref # 55020A)	55020-1748-21	1
GUARD,SWING ARM (Ref # 55020C)	55020-1756	1
BOLT,6X10 (Ref # 92002)	92002-1449	8
DAMPER (Ref # 92075)	92075-051	6
DAMPER (Ref # 92075A)	92075-1002	1
DAMPER (Ref # 92075B)	92075-157	2

© 2026 Kawasaki Motors Corp., U.S.A.