2006 Brute Force 650 4x4

PARTS DIAGRAM

Brake Pedal

F2260

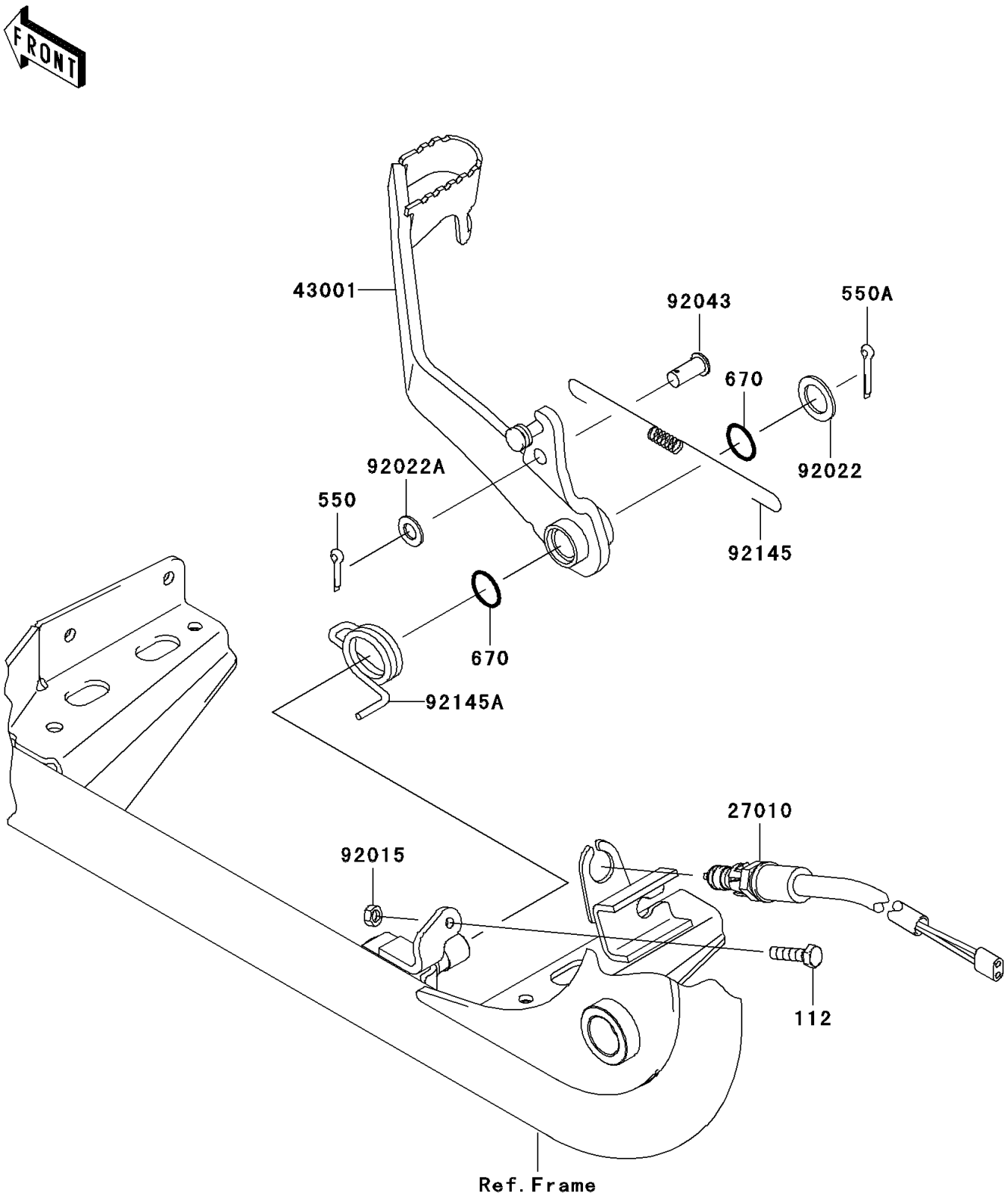

© 2026 Kawasaki Motors Corp., U.S.A.

2006 Brute Force 650 4x4

PARTS LIST

Brake Pedal

ITEM NAME	PART NUMBER	QUANTITY
BOLT-UPSET,6X22 (Ref # 112)	112AA0622	1
PIN-COTTER,2.0X15 (Ref # 550)	550AA2015	1
PIN-COTTER,2.0X22 (Ref # 550A)	550AA2022	1
O RING,15MM (Ref # 670)	670B2015	2
SWITCH,BRAKE (Ref # 27010)	27010-1494	1
LEVER-BRAKE,PEDAL (Ref # 43001)	43001-0092	1
NUT,6MM (Ref # 92015)	92015-1410	1
WASHER,15.5X24X1.6 (Ref # 92022)	92022-1049	1
WASHER,8.5X16X1.2 (Ref # 92022A)	92022-1582	1
PIN,8X16 (Ref # 92043)	92043-1013	1
SPRING,BRAKE SWITCH (Ref # 92145)	92145-0056	1
SPRING,BRAKE PEDAL RETURN (Ref # 92145A)	92145-1421	1

© 2026 Kawasaki Motors Corp., U.S.A.