2006 Brute Force 650 4x4

PARTS DIAGRAM

Swingarm

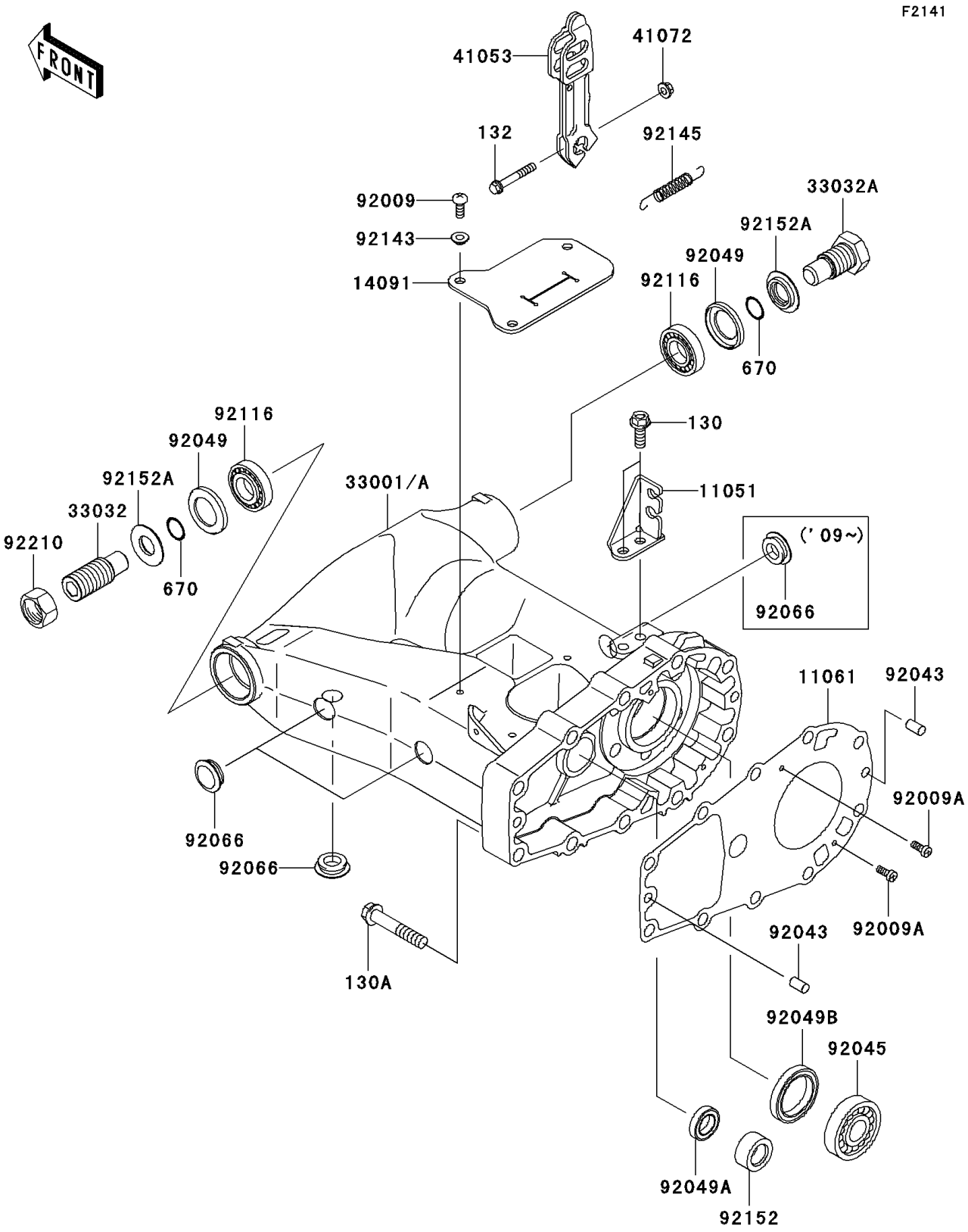

© 2026 Kawasaki Motors Corp., U.S.A.

2006 Brute Force 650 4x4

PARTS LIST

Swingarm

ITEM NAME	PART NUMBER	QUANTITY
BOLT-FLANGED,8X22 (Ref # 130)	130BB0822	2
BOLT-FLANGED,10X55 (Ref # 130A)	130CA1055	10
BOLT-FLANGED-SMALL,6X40 (Ref # 132)	132BA0640	1
O RING,16MM (Ref # 670)	670B2016	2
BRACKET,CABLE (Ref # 11051)	11051-1762	1
GASKET,SWING ARM (Ref # 11061)	11061-1065	1
COVER (Ref # 14091)	14091-7508	1
ARM-COMP-SWING (Ref # 33001)	33001-0008	1
SHAFT-SWING ARM,LEFT SIDE (Ref # 33032)	33032-1197	1
SHAFT-SWING ARM,RIGHT SIDE (Ref # 33032A)	33032-1200	1
LEVER-BRAKE CAM (Ref # 41053)	41053-1094	1
NUT,6MM (Ref # 41072)	41072-007	1
SCREW,TAPPING,6X16 (Ref # 92009)	92009-1166	3
SCREW,4X10 (Ref # 92009A)	92009-1936	2
PIN,8X14 (Ref # 92043)	92043-1567	2
BEARING-BALL,TMBO/28C3 (Ref # 92045)	92045-0093	1
SEAL-OIL,26406 (Ref # 92049)	92049-1030	2
SEAL-OIL,TC17X28X6 (Ref # 92049A)	92049-1537	1
SEAL-OIL,HTC35X48X7 (Ref # 92049B)	92049-1538	1
PLUG (Ref # 92066)	92066-1534	3
BEARING-ROLLER,4T30203E1 (Ref # 92116)	92116-1001	2
COLLAR (Ref # 92143)	92143-1331	3
SPRING,BRAKE LEVER RETURN (Ref # 92145)	92145-1313	1
COLLAR (Ref # 92152)	92152-1240	1
COLLAR (Ref # 92152A)	92152-1356	2
NUT,22MM (Ref # 92210)	92210-0190	1

© 2026 Kawasaki Motors Corp., U.S.A.