2006 Brute Force 650 4x4

PARTS DIAGRAM

Control

E7110

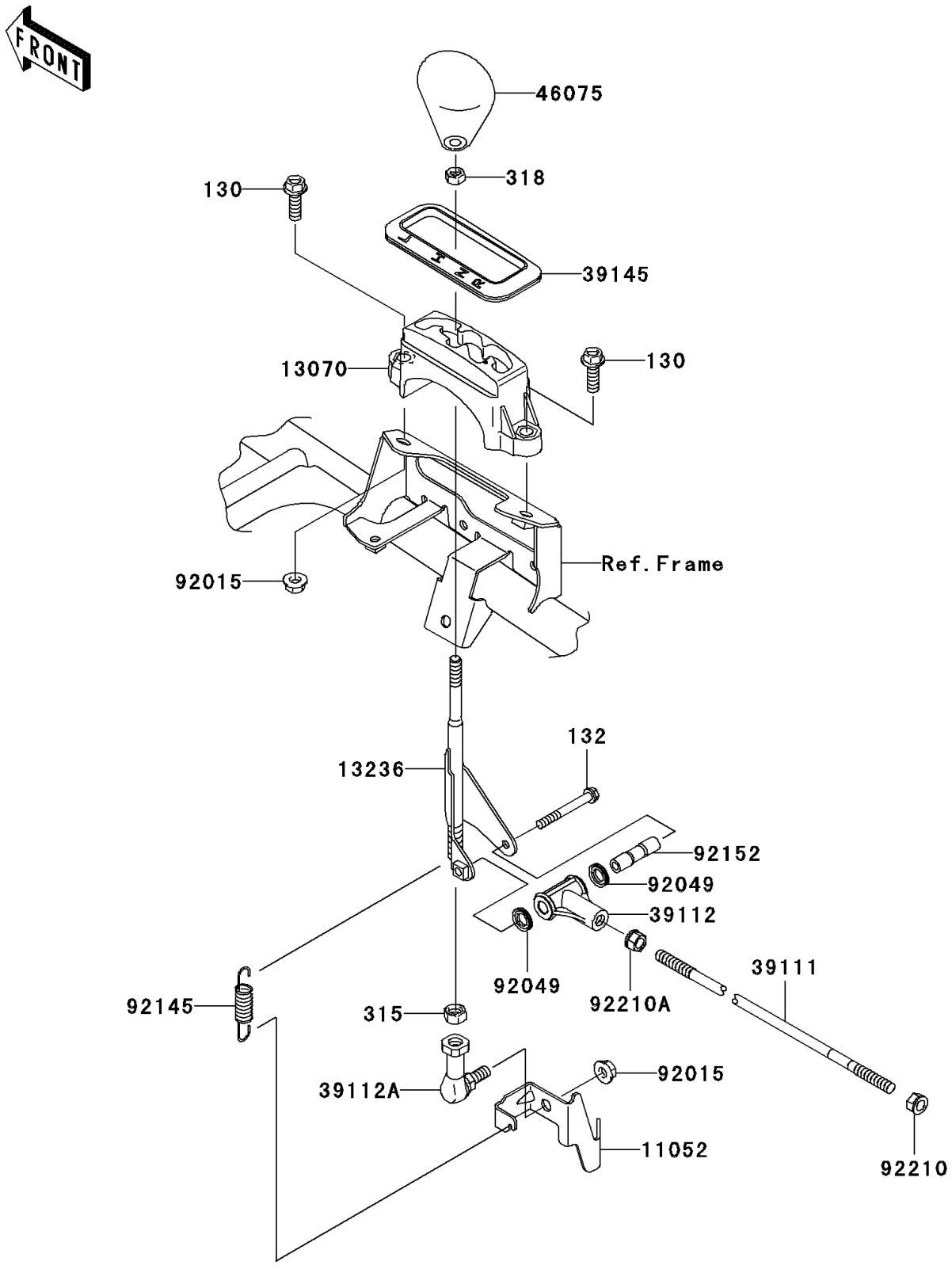

© 2026 Kawasaki Motors Corp., U.S.A.

2006 Brute Force 650 4x4

PARTS LIST

Control

ITEM NAME	PART NUMBER	QUANTITY
BOLT-FLANGED,8X25 (Ref # 130)	130CD0825	2
BOLT-FLANGED-SMALL,6X50 (Ref # 132)	132BB0650	1
NUT-HEX-FINE,10MM (Ref # 315)	315AA1000	1
NUT-HEX-SMALL,8MM (Ref # 318)	318BA0800	1
BRACKET,CONTROL (Ref # 11052)	11052-1441	1
GUIDE,CONTROL SHAFT (Ref # 13070)	13070-1396	1
LEVER-COMP,SHIFT (Ref # 13236)	13236-1384	1
ROD-TIE,SHIFT (Ref # 39111)	39111-1174	1
RODEND-TIE (Ref # 39112)	39112-1079	1
RODEND-TIE,CONTROL PIVOT (Ref # 39112A)	39112-1084	1
TRIM-SEAL,CONTROL GUIDE (Ref # 39145)	39145-1121	1
GRIP,SHIFT (Ref # 46075)	46075-0046	1
NUT,8MM (Ref # 92015)	92015-1432	2
SEAL-OIL (Ref # 92049)	92049-1458	2
SPRING,CONTROL (Ref # 92145)	92145-1441	1
COLLAR,RODEND-TIE (Ref # 92152)	92152-1222	1
NUT,8MM (Ref # 92210)	92210-1242	1
NUT,LH,THREAD 8MM (Ref # 92210A)	92210-1284	1

© 2026 Kawasaki Motors Corp., U.S.A.