2012 KX™450F

PARTS DIAGRAM

Oil Filter

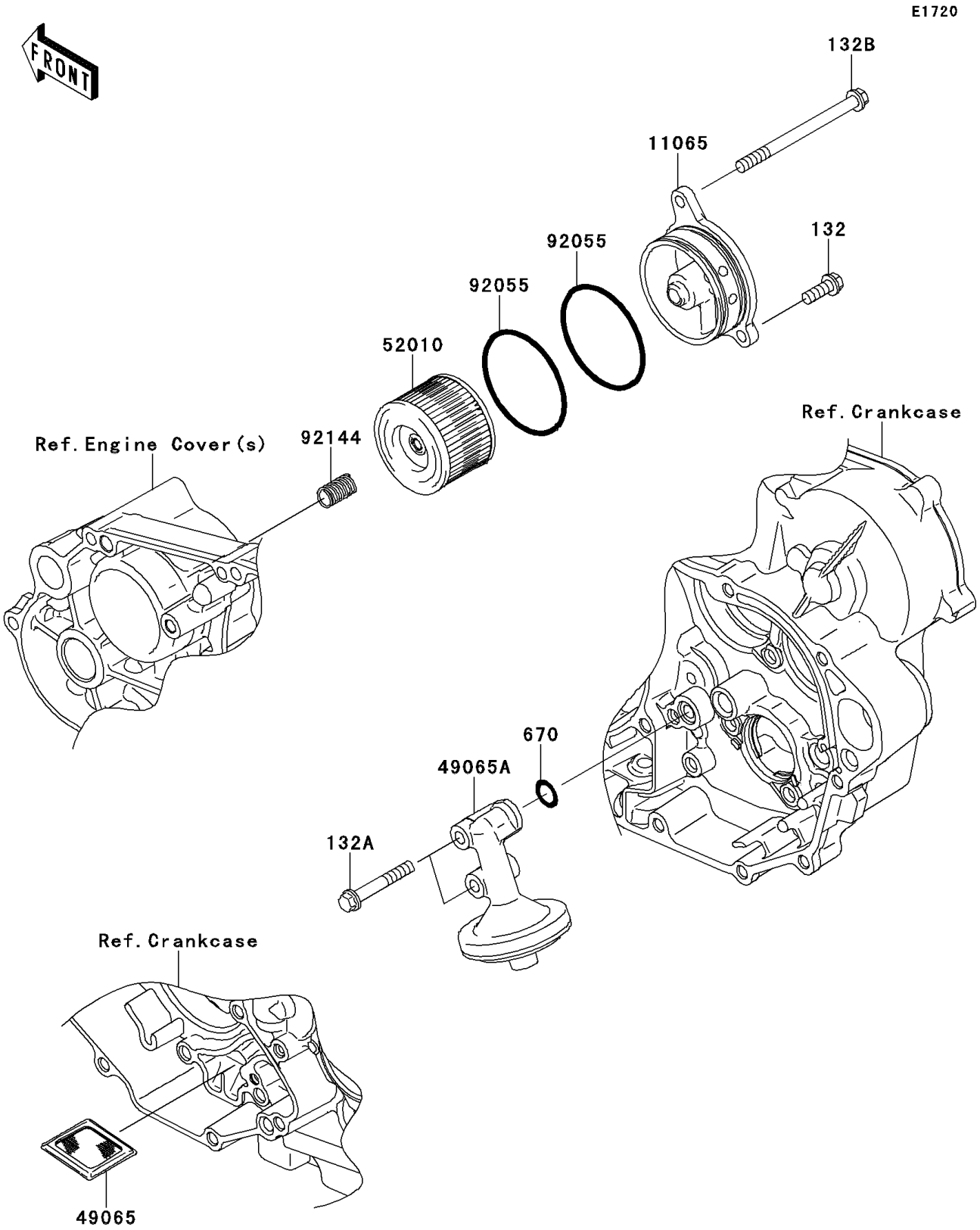

© 2026 Kawasaki Motors Corp., U.S.A.

2012 KX™450F

PARTS LIST

Oil Filter

ITEM NAME	PART NUMBER	QUANTITY

© 2026 Kawasaki Motors Corp., U.S.A.