2012 KX™450F

PARTS DIAGRAM

Oil Pump

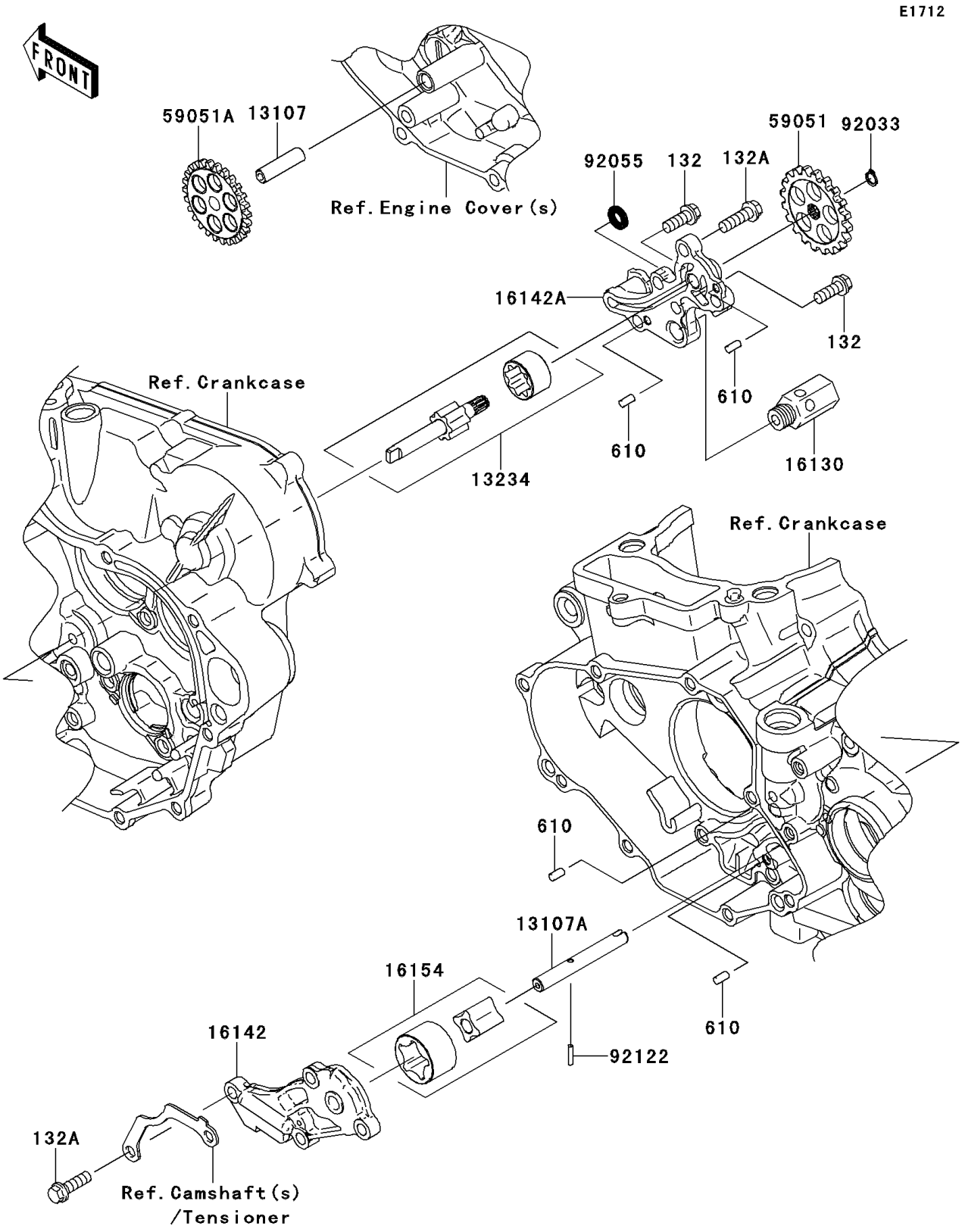

© 2026 Kawasaki Motors Corp., U.S.A.

2012 KX™450F

PARTS LIST

Oil Pump

ITEM NAME	PART NUMBER	QUANTITY
BOLT-FLANGED-SMALL,6X16 (Ref # 132)	132BA0616	2
BOLT-FLANGED-SMALL,6X20 (Ref # 132A)	132BA0620	7
ROLLER,4X8 (Ref # 610)	610A0408	4
SHAFT (Ref # 13107)	13107-0056	1
SHAFT,OIL PUMP,SCAVENGE (Ref # 13107A)	13107-0134	1
SHAFT-COMP,FEED (Ref # 13234)	13234-0036	1
VALVE-ASSY-RELIEF (Ref # 16130)	16130-1058	1
COVER-PUMP,OIL,LH (Ref # 16142)	16142-0042	1
COVER-PUMP,OIL,RH (Ref # 16142A)	16142-0062	1
ROTOR-PUMP,SCAVENGE (Ref # 16154)	16154-0069	1
GEAR-SPUR,O/P DRIVEN,28T (Ref # 59051)	59051-0044	1
GEAR-SPUR,O/P IDLER,26T (Ref # 59051A)	59051-0045	1
RING-SNAP (Ref # 92033)	92033-0019	1
RING-O,OD=13 (Ref # 92055)	92055-074	1
ROLLER,2.5X11.8 (Ref # 92122)	92122-0021	1

© 2026 Kawasaki Motors Corp., U.S.A.