2012 KX™450F

PARTS DIAGRAM

Fuel Injection

E1530

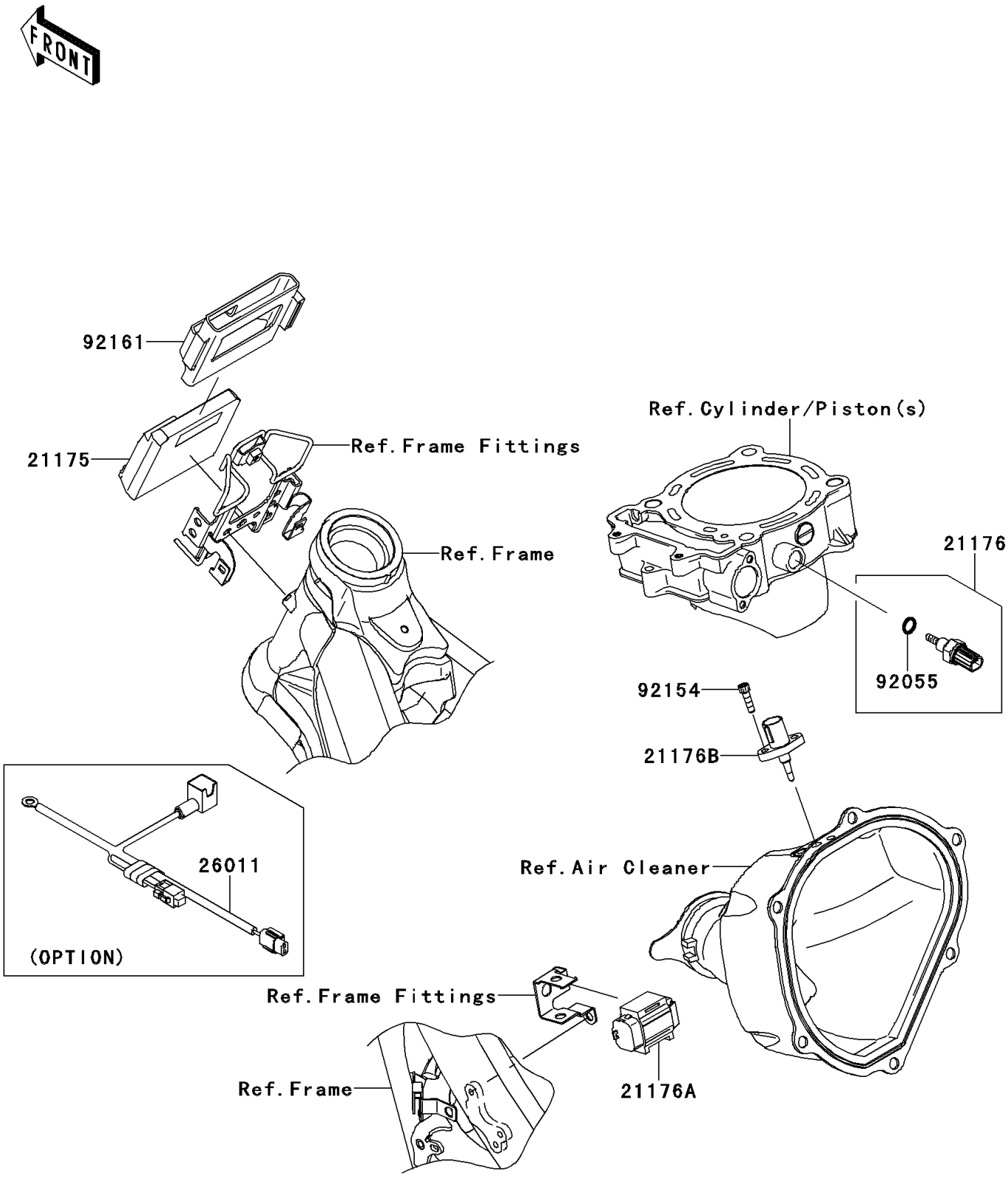

© 2026 Kawasaki Motors Corp., U.S.A.

2012 KX™450F

PARTS LIST

Fuel Injection

ITEM NAME	PART NUMBER	QUANTITY

© 2026 Kawasaki Motors Corp., U.S.A.