2011 NINJA® 250R

PARTS DIAGRAM

Ignition System

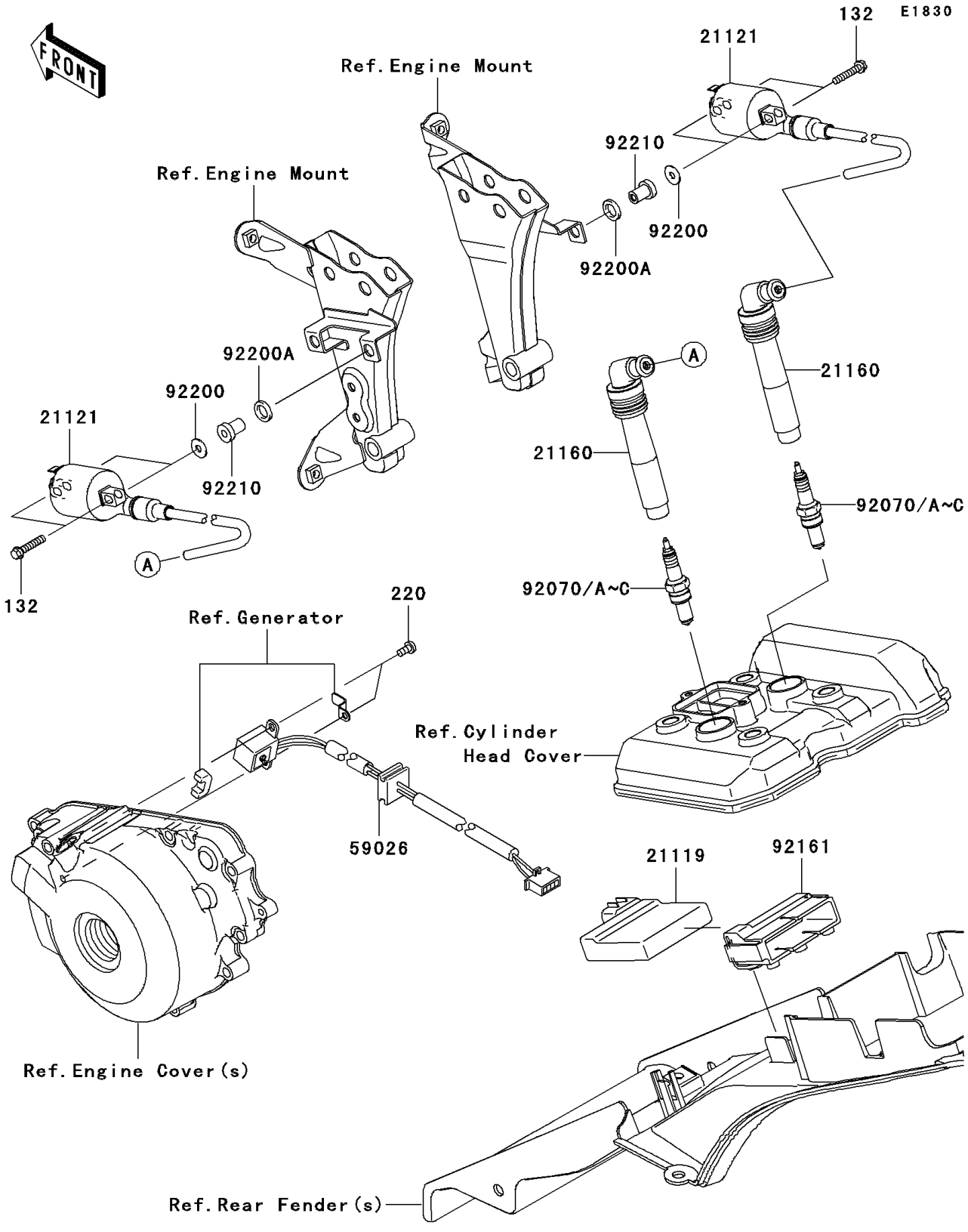

© 2026 Kawasaki Motors Corp., U.S.A.

2011 NINJA® 250R

PARTS LIST

Ignition System

ITEM NAME	PART NUMBER	QUANTITY
BOLT-FLANGED-SMALL,5X25 (Ref # 132)	132BA0525	4
SCREW-PAN-CROSS,5X10 (Ref # 220)	220AA0510	2
IGNITER (Ref # 21119)	21119-0096	1
COIL-IGNITION (Ref # 21121)	21121-0054	2
CAP-ASSY-PLUG (Ref # 21160)	21160-0013	2
COIL-PULSING (Ref # 59026)	59026-0037	1
PLUG-SPARK,CR8E(NGK) (Ref # 92070)	92070-0031	2
PLUG-SPARK,U24ESR-N(ND) (Ref # 92070A)		2
PLUG-SPARK,CR7E(NGK) (Ref # 92070B)	92070-1209	2
PLUG-SPARK,U22ESR-N(ND) (Ref # 92070C)		2
DAMPER (Ref # 92161)	92161-1275	1
WASHER,5.2X15X1.0 (Ref # 92200)	92200-0456	4
WASHER,10.5X16X2.3 (Ref # 92200A)	92200-0457	4
NUT,5MM (Ref # 92210)	92210-0001	4

© 2026 Kawasaki Motors Corp., U.S.A.