2007 Vulcan 1500 Classic

PARTS DIAGRAM

Taillight(s)

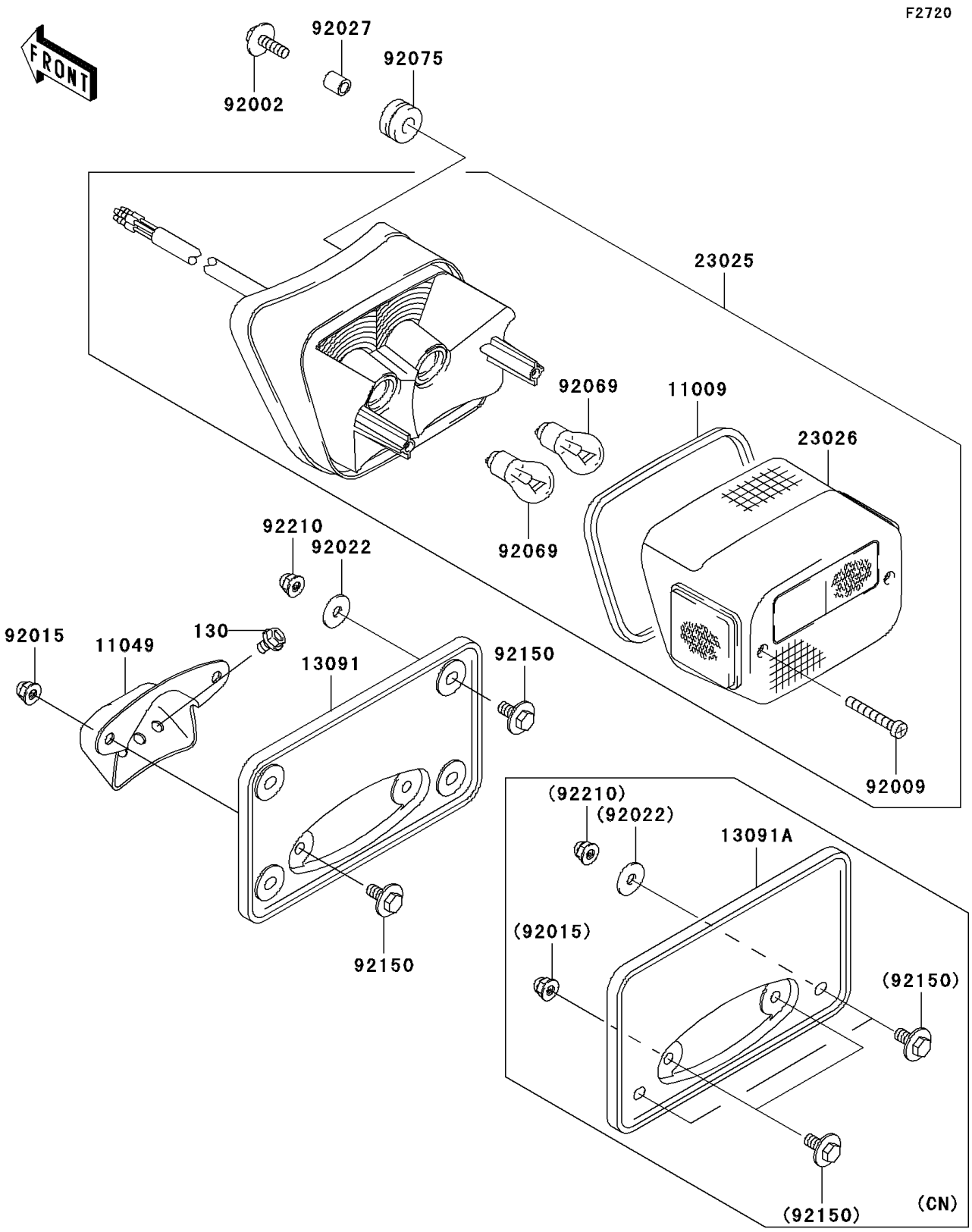

© 2026 Kawasaki Motors Corp., U.S.A.

2007 Vulcan 1500 Classic

PARTS LIST

Taillight(s)

ITEM NAME	PART NUMBER	QUANTITY
BOLT-FLANGED,6X10 (Ref # 130)	130V0610	2
GASKET,TAIL LAMP LENS (Ref # 11009)	11009-1660	1
BRACKET,LICENSE PLATE (Ref # 11049)	11049-1604	1
LAMP-TAIL (Ref # 23025)	23025-1295	1
LENS,TAIL LAMP (Ref # 23026)	23026-1087	1
BOLT,UPSET-WP,6X22 (Ref # 92002)	92002-1262	3
SCREW,TAPPING,4X20 (Ref # 92009)	92009-1378	2
NUT,CAP,6MM (Ref # 92015)	92015-1385	2
COLLAR,6.8X10X12 (Ref # 92027)	92027-162	3
BULB,12V 21/5W (Ref # 92069)	92069-063	2
DAMPER (Ref # 92075)	92075-209	3
HOLDER,LICENSE PLATE (Ref # 13091)	13091-1500	1
HOLDER,LICENSE PLATE (Ref # 13091A)	13091-1952	1
WASHER,6.5X20X1.6,BLACK (Ref # 92022)	92022-1346	2
WASHER,6.5X20X1.6,BLACK (Ref # 92022)	92022-1346	4
BOLT,6X14 (Ref # 92150)	92150-1133	4
BOLT,6X14 (Ref # 92150)	92150-1133	6
NUT,CAP,6MM (Ref # 92210)	92210-0003	2
NUT,CAP,6MM (Ref # 92210)	92210-0003	4

© 2026 Kawasaki Motors Corp., U.S.A.