2006 Vulcan 1500 Classic

PARTS DIAGRAM

Side Covers

F2611

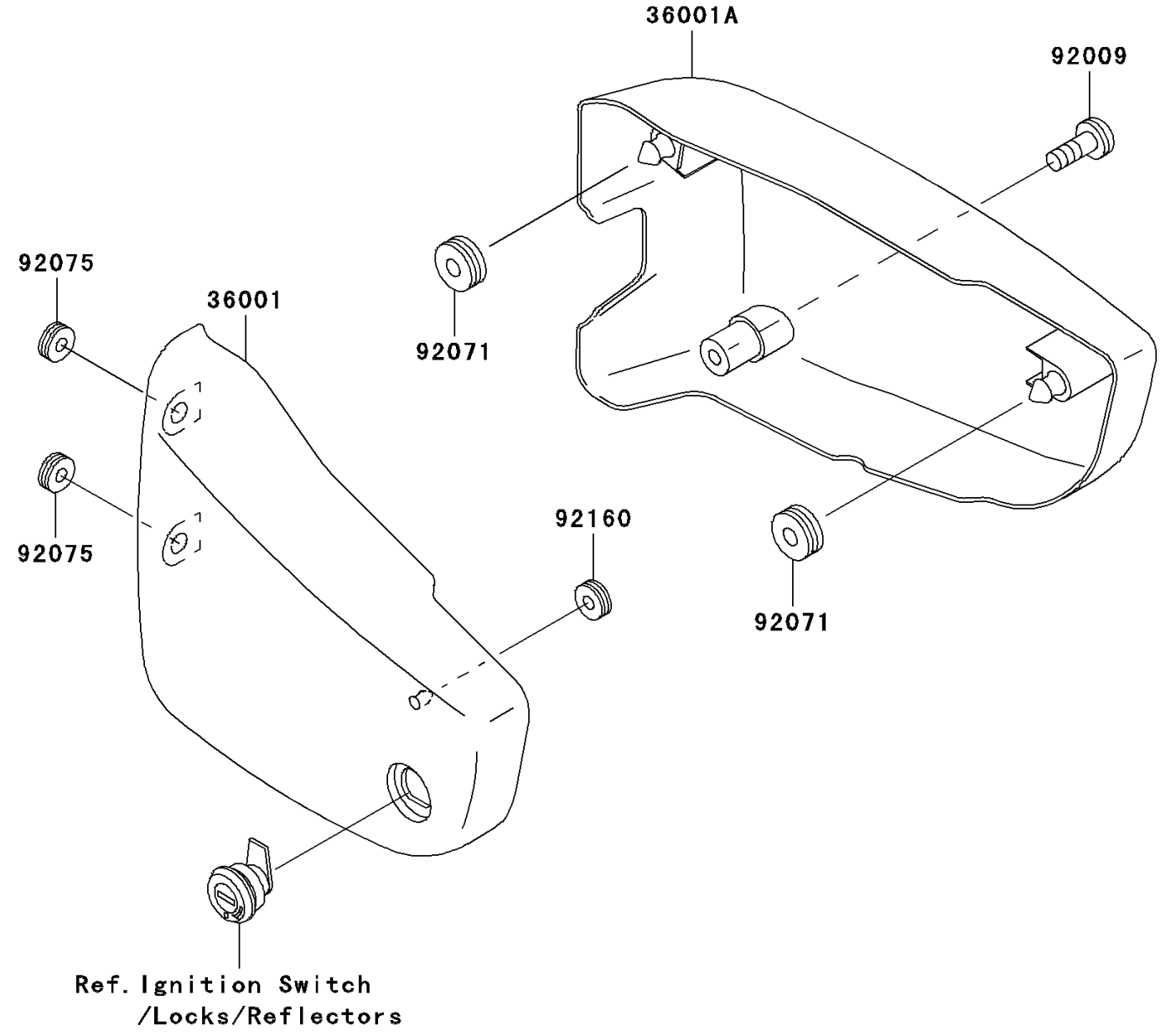

© 2026 Kawasaki Motors Corp., U.S.A.

2006 Vulcan 1500 Classic

PARTS LIST

Side Covers

ITEM NAME	PART NUMBER	QUANTITY
COVER-SIDE,LH,EBONY (Ref # 36001)	36001-1645-H8	1
COVER-SIDE,RH,EBONY (Ref # 36001A)	36001-1646-H8	1
SCREW,6X35 (Ref # 92009)	92009-1874	1
GROMMET (Ref # 92071)	92071-1131	2
DAMPER (Ref # 92075)	92075-1629	2
DAMPER (Ref # 92160)	92160-1944	1

© 2026 Kawasaki Motors Corp., U.S.A.