2006 Vulcan 1500 Classic

PARTS DIAGRAM

Front Brake

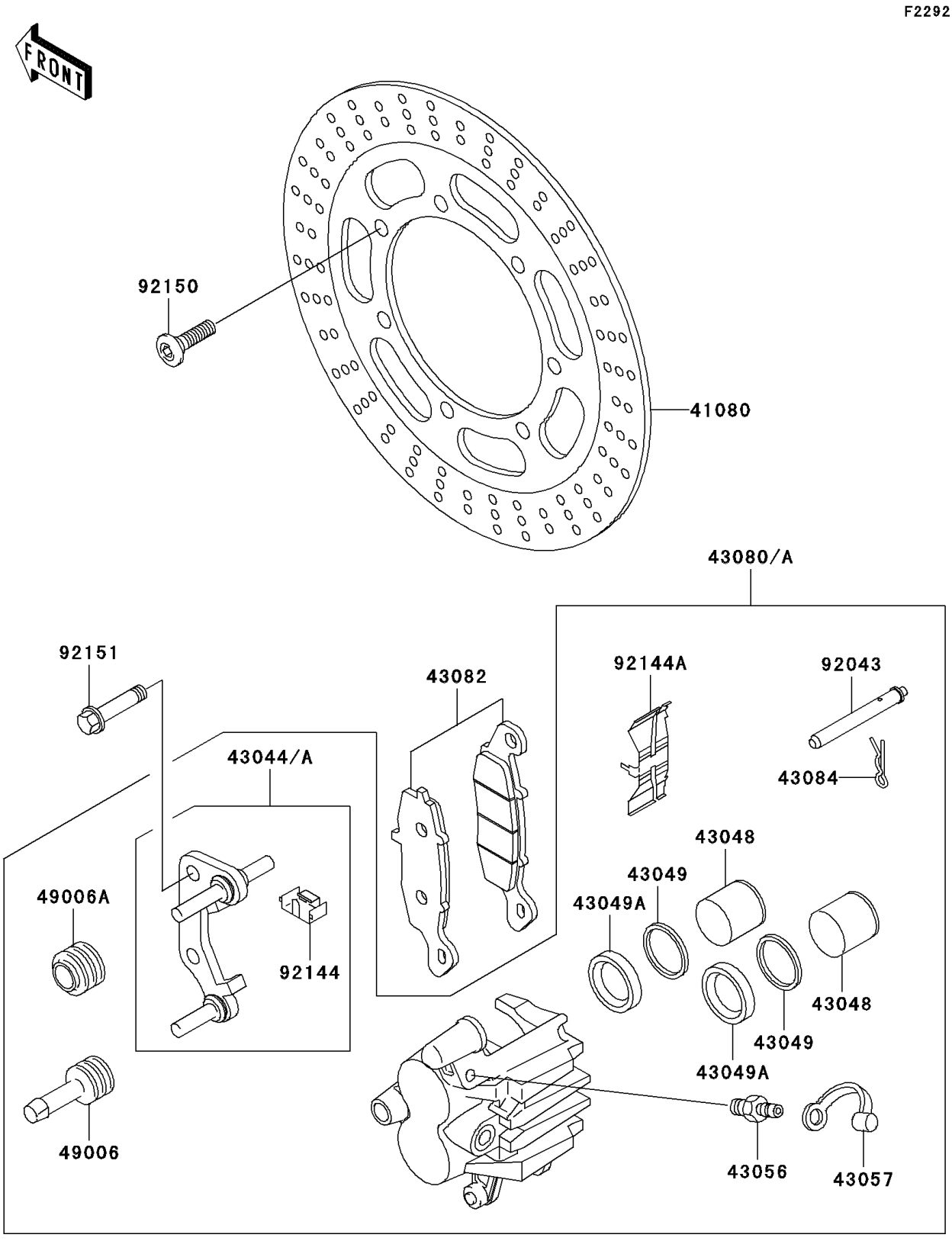

© 2026 Kawasaki Motors Corp., U.S.A.

2006 Vulcan 1500 Classic

PARTS LIST

Front Brake

ITEM NAME	PART NUMBER	QUANTITY
DISC,FR,SILVER (Ref # 41080)	41080-0018-CM	1
HOLDER-COMP-CALIPER,FR,LH (Ref # 43044A)	43044-1117	1
PISTON-CALIPER (Ref # 43048)	43048-1073	2
PACKING (Ref # 43049)	43049-1068	2
PACKING,PISTON SEAL (Ref # 43049A)	43049-1092	2
BREATHER-BRAKE (Ref # 43056)	43056-1054	1
CAP-BREATHER (Ref # 43057)	43057-003	1
CALIPER-SUB-ASSY,FR,LH,SILVER (Ref # 43080A)	43080-5034-GN	1
PAD-ASSY-BRAKE (Ref # 43082)	43082-1234	1
CLAMP,PAD (Ref # 43084)	43084-003	1
BOOT,CALIPER (Ref # 49006)	49006-1054	1
BOOT,CALIPER (Ref # 49006A)	49006-1095	1
PIN,PAD (Ref # 92043)	92043-1489	1
SPRING,STOPPER (Ref # 92144)	92144-1831	1
SPRING,PAD,LH (Ref # 92144A)	92144-1832	1
BOLT,SOCKET,8X30 (Ref # 92150)	92150-1771	7
BOLT,FLANGED,10X47 (Ref # 92151)	92151-1321	2

© 2026 Kawasaki Motors Corp., U.S.A.