2006 Vulcan 1500 Classic

PARTS DIAGRAM

Fuel Injection

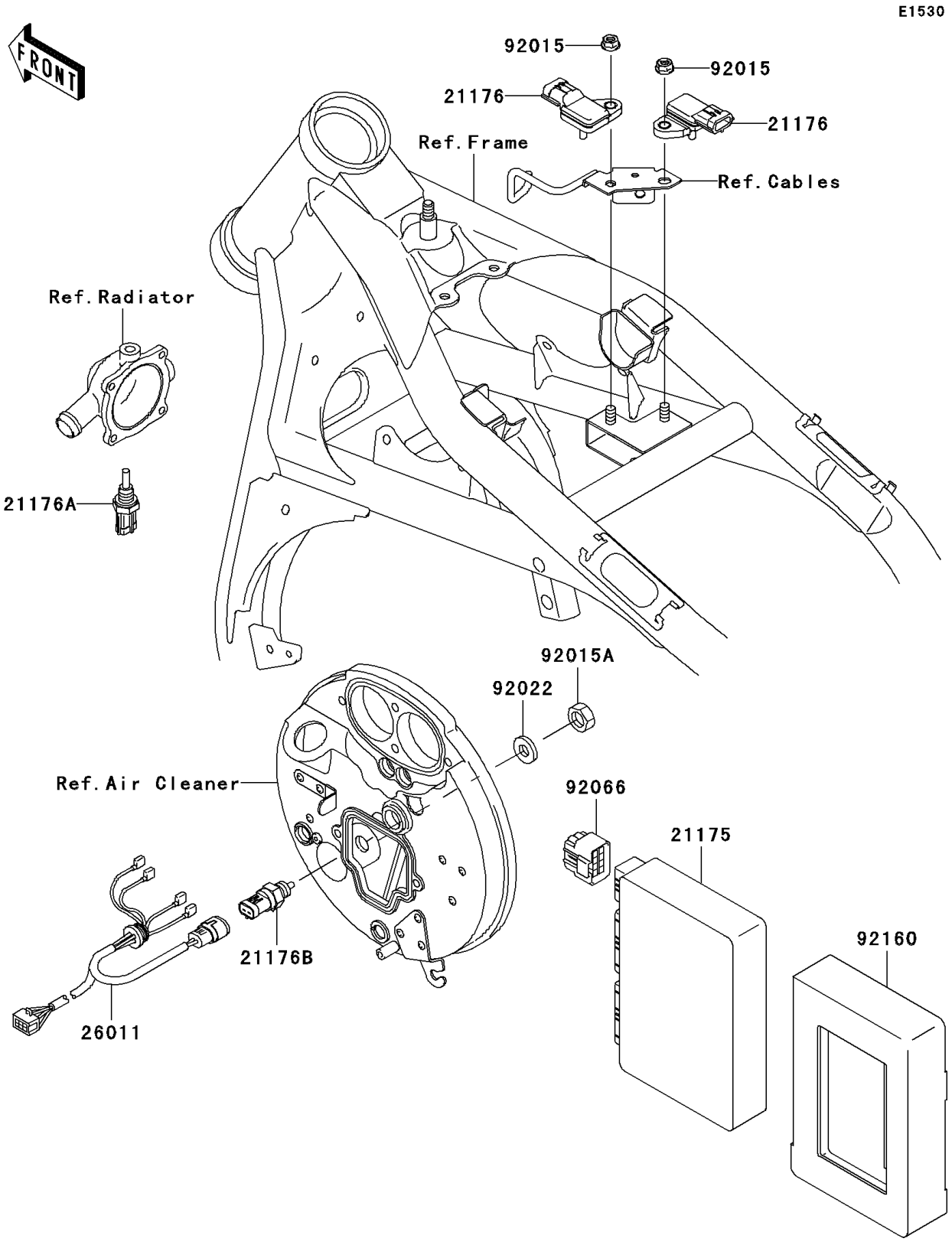

© 2026 Kawasaki Motors Corp., U.S.A.

2006 Vulcan 1500 Classic

PARTS LIST

Fuel Injection

ITEM NAME	PART NUMBER	QUANTITY
CONTROL UNIT-ELECTRONIC (Ref # 21175)	21175-1071	1
SENSOR,PRESSURE (Ref # 21176)	21176-0058	2
SENSOR,WATER TEMPERATURE (Ref # 21176A)	21176-1085	1
SENSOR,AIR TEMPERATURE (Ref # 21176B)	21176-1086	1
WIRE-LEAD (Ref # 26011)	26011-1776	1
NUT,6MM (Ref # 92015)	92015-1386	2
NUT,12MM (Ref # 92015A)	92015-1395	1
WASHER,12.3X20X0.5 (Ref # 92022)	92022-269	1
PLUG,COUPLER (Ref # 92066)	92066-1521	1
DAMPER (Ref # 92160)	92160-1965	1

© 2026 Kawasaki Motors Corp., U.S.A.