2008 KLX®110

PARTS DIAGRAM

Accessory

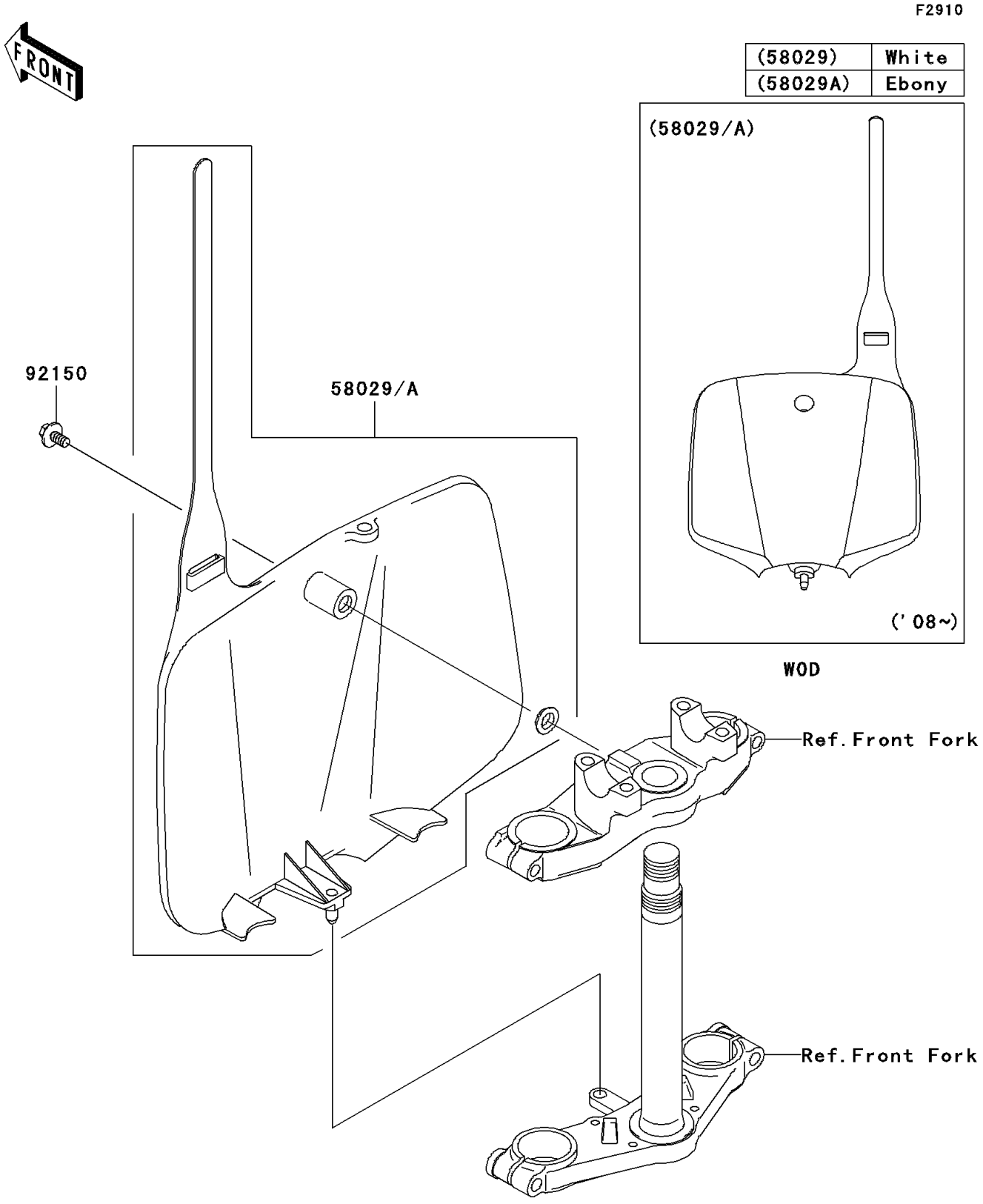

© 2026 Kawasaki Motors Corp., U.S.A.

2008 KLX®110

PARTS LIST

Accessory

ITEM NAME	PART NUMBER	QUANTITY
PLATE-NUMBER,S.WHITE (Ref # 58029)	58029-1087-266	1
BOLT,6X14 (Ref # 92150)	92150-1340	1

© 2026 Kawasaki Motors Corp., U.S.A.