2008 KLX®110

PARTS DIAGRAM

Engine Cover(s)

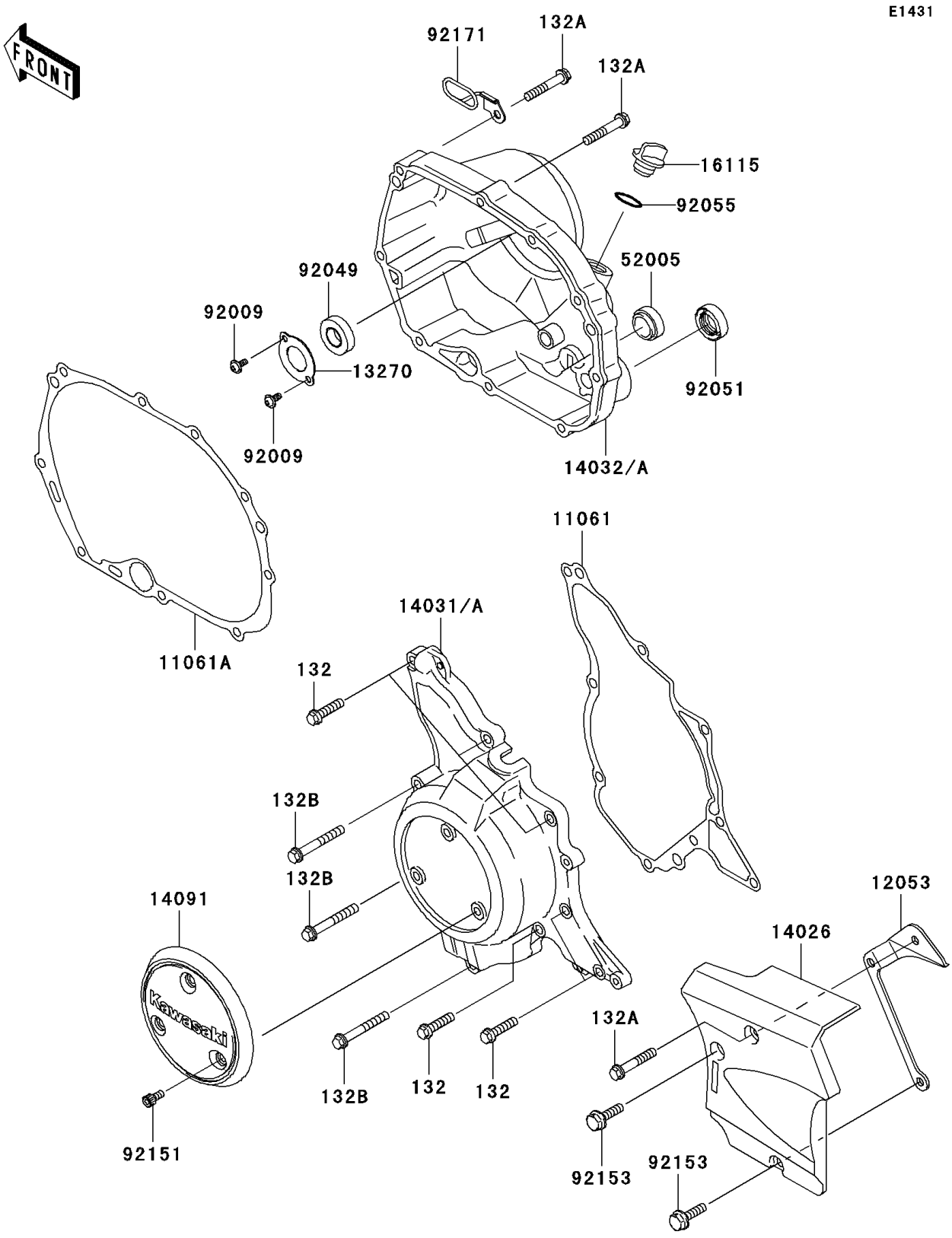

© 2026 Kawasaki Motors Corp., U.S.A.

2008 KLX®110

PARTS LIST

Engine Cover(s)

ITEM NAME	PART NUMBER	QUANTITY
BOLT-FLANGED-SMALL,6X25 (Ref # 132)	132BD0625	6
BOLT-FLANGED-SMALL,6X35 (Ref # 132A)	132BD0635	10
BOLT-FLANGED-SMALL,6X45 (Ref # 132B)	132BD0645	3
GASKET,GENERATOR (Ref # 11061)	11061-0125	1
GASKET,CLUTCH COVER (Ref # 11061A)	11061-0289	1
GUIDE-CHAIN,TENSION (Ref # 12053)	12053-1467	1
PLATE (Ref # 13270)	13270-1800	1
COVER-CHAIN (Ref # 14026)	14026-1285	1
COVER-GENERATOR (Ref # 14031A)	14031-1342	1
COVER-CLUTCH (Ref # 14032A)	14032-1529	1
COVER,HEAT INSULATOR (Ref # 14091)	14091-1444	1
CAP-OIL FILLER (Ref # 16115)	16115-1068	1
GAUGE,OIL LEVEL (Ref # 52005)	52005-0019	1
SCREW (Ref # 92009)	92009-1745	2
SEAL-OIL,AC0387E0 (Ref # 92049)	92049-1595	1
SEAL-OIL,TB16267 (Ref # 92051)	92051-003	1
RING-O,31.7X2.4 (Ref # 92055)	92055-049	1
BOLT,SOCKET,5X10 (Ref # 92151)	92151-1212	3
BOLT,6X20 (Ref # 92153)	92153-1184	2
CLAMP,DRAIN TUBE (Ref # 92171)	92171-1124	1

© 2026 Kawasaki Motors Corp., U.S.A.