2011 CONCOURS® 14 ABS

PARTS DIAGRAM

Generator

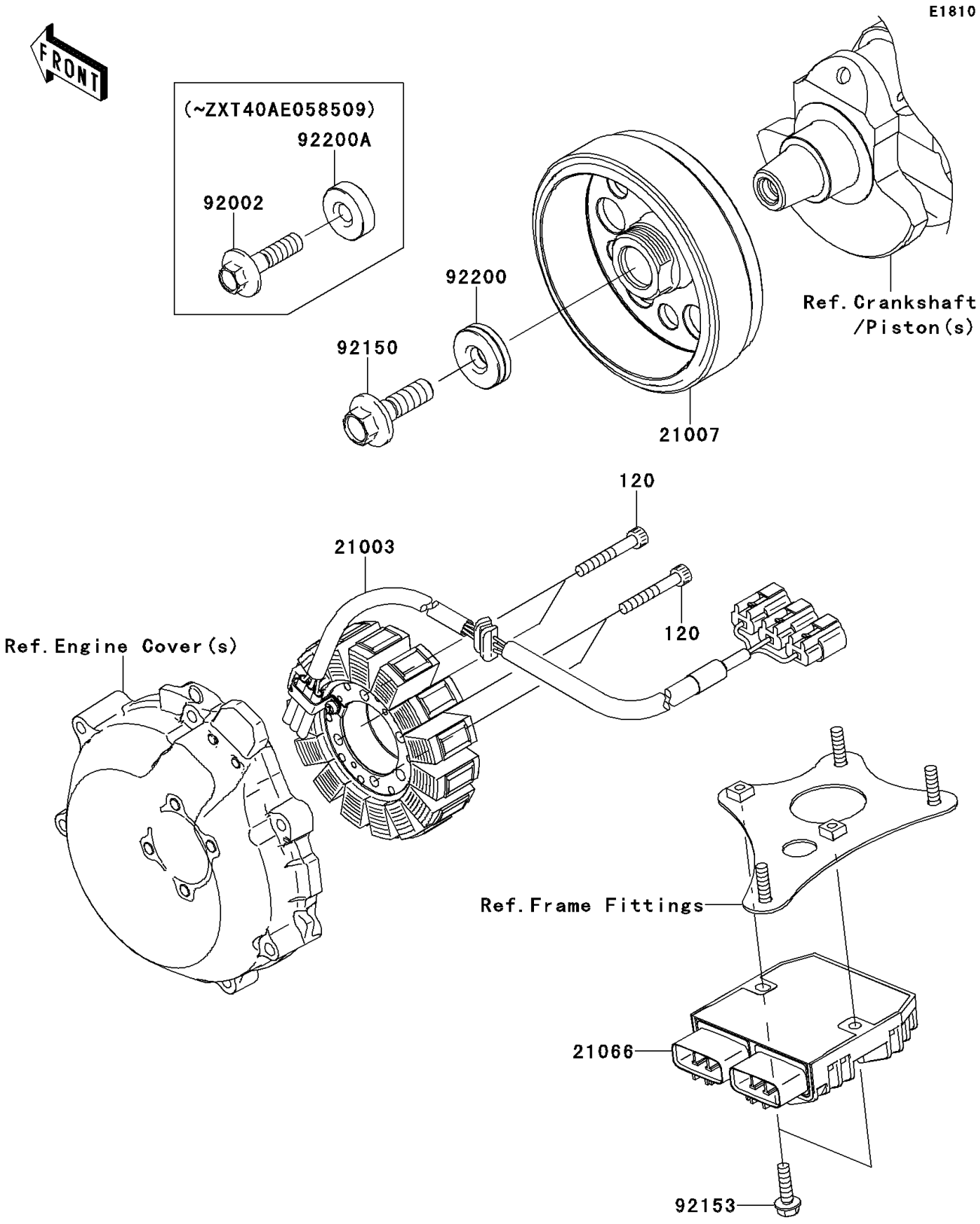

© 2026 Kawasaki Motors Corp., U.S.A.

2011 CONCOURS® 14 ABS

PARTS LIST

Generator

ITEM NAME	PART NUMBER	QUANTITY
BOLT-SOCKET,6X40 (Ref # 120)	120CA0640	4
STATOR (Ref # 21003)	21003-0085	1
ROTOR (Ref # 21007)	21007-0125	1
REGULATOR-VOLTAGE (Ref # 21066)	21066-0714	1
BOLT,12X40 (Ref # 92150)	92150-1717	1
BOLT,FLANGED,6X22 (Ref # 92153)	92153-1598	2
WASHER,12X34X9 (Ref # 92200)	92200-0369	1

© 2026 Kawasaki Motors Corp., U.S.A.