# 2012 CONCOURS® 14 ABS

## PARTS DIAGRAM

### Fuel Injection

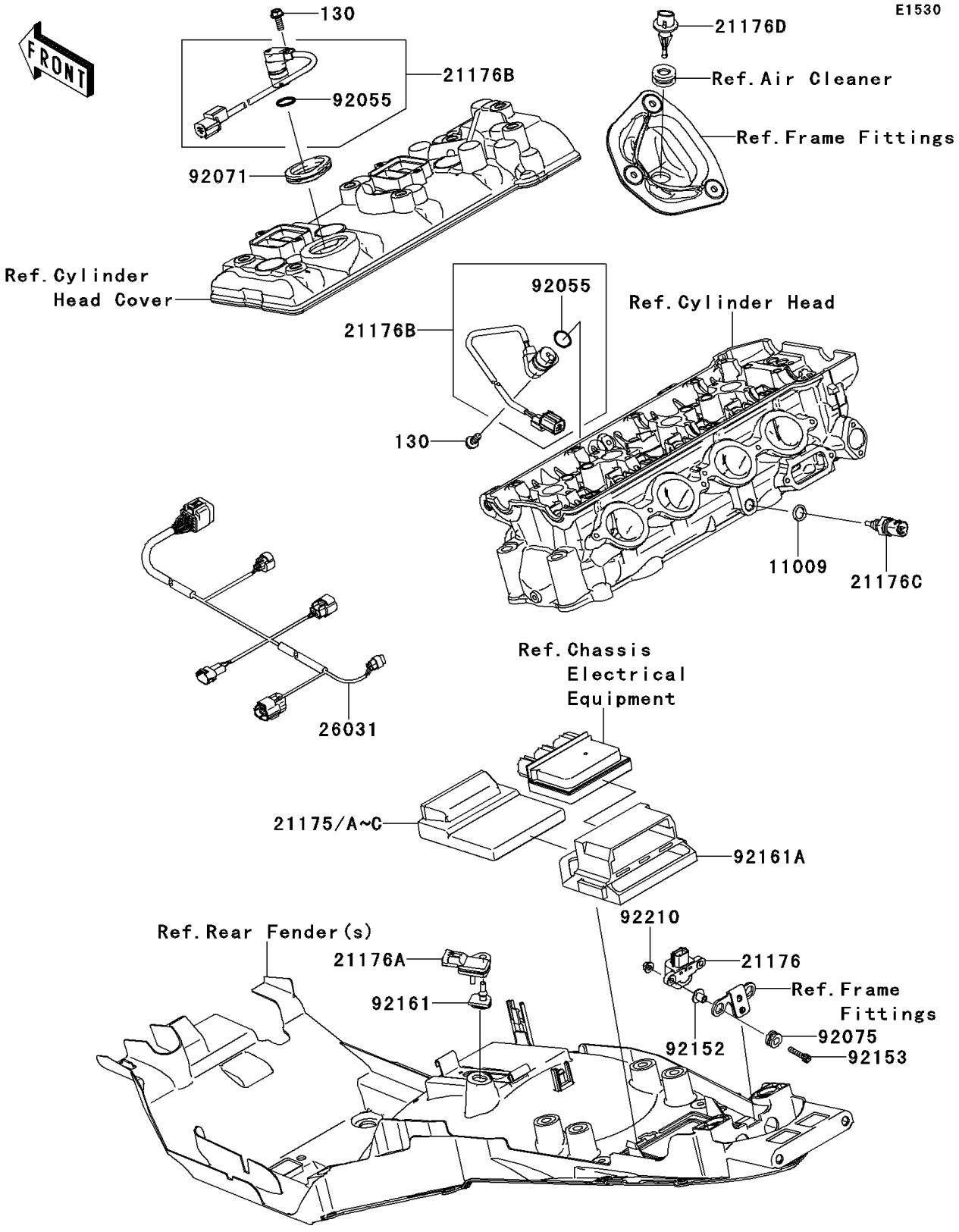


© 2026 Kawasaki Motors Corp., U.S.A.

# 2012 CONCOURS® 14 ABS

## PARTS LIST

### Fuel Injection

| ITEM NAME | PART NUMBER | QUANTITY |
|---|---|---|
| BOLT-FLANGED,6X16 (Ref # 130) | 130CC0616 | 2 |
| GASKET,12.5X18X1.5 (Ref # 11009) | 11009-1376 | 1 |
| SENSOR,VEHICLE-DOWN (Ref # 21176) | 21176-0026 | 1 |
| SENSOR,PRESSURE (Ref # 21176A) | 21176-0058 | 1 |
| SENSOR,CAM (Ref # 21176B) | 21176-0064 | 2 |
| SENSOR,WATER TEMP (Ref # 21176C) | 21176-1120 | 1 |
| SENSOR,AIR TEMP (Ref # 21176D) | 21176-2106 | 1 |
| HARNESS (Ref # 26031) | 26031-0799 | 1 |
| RING-O (Ref # 92055) | 92055-1639 | 2 |
| GROMMET (Ref # 92071) | 92071-0028 | 1 |
| DAMPER (Ref # 92075) | 92075-1912 | 2 |
| COLLAR (Ref # 92152) | 92152-0329 | 2 |
| BOLT,SOCKET,5X22 (Ref # 92153) | 92153-1597 | 2 |
| DAMPER (Ref # 92161) | 92161-0041 | 1 |
| DAMPER (Ref # 92161A) | 92161-0092 | 1 |
| NUT,FLANGED,5MM (Ref # 92210) | 92210-0007 | 2 |
| CONTROL UNIT-ELECTRONIC (Ref # 21175B) | 21175-0368 | 1 |
| CONTROL UNIT-ELECTRONIC (Ref # 21175C) | 21175-0369 | 1 |

© 2026 Kawasaki Motors Corp., U.S.A.