2014 KLX®110L

PARTS DIAGRAM

Gear Change Drum/Shift Fork(s)

Kawasaki
Let the Good Times Roll®

E1362

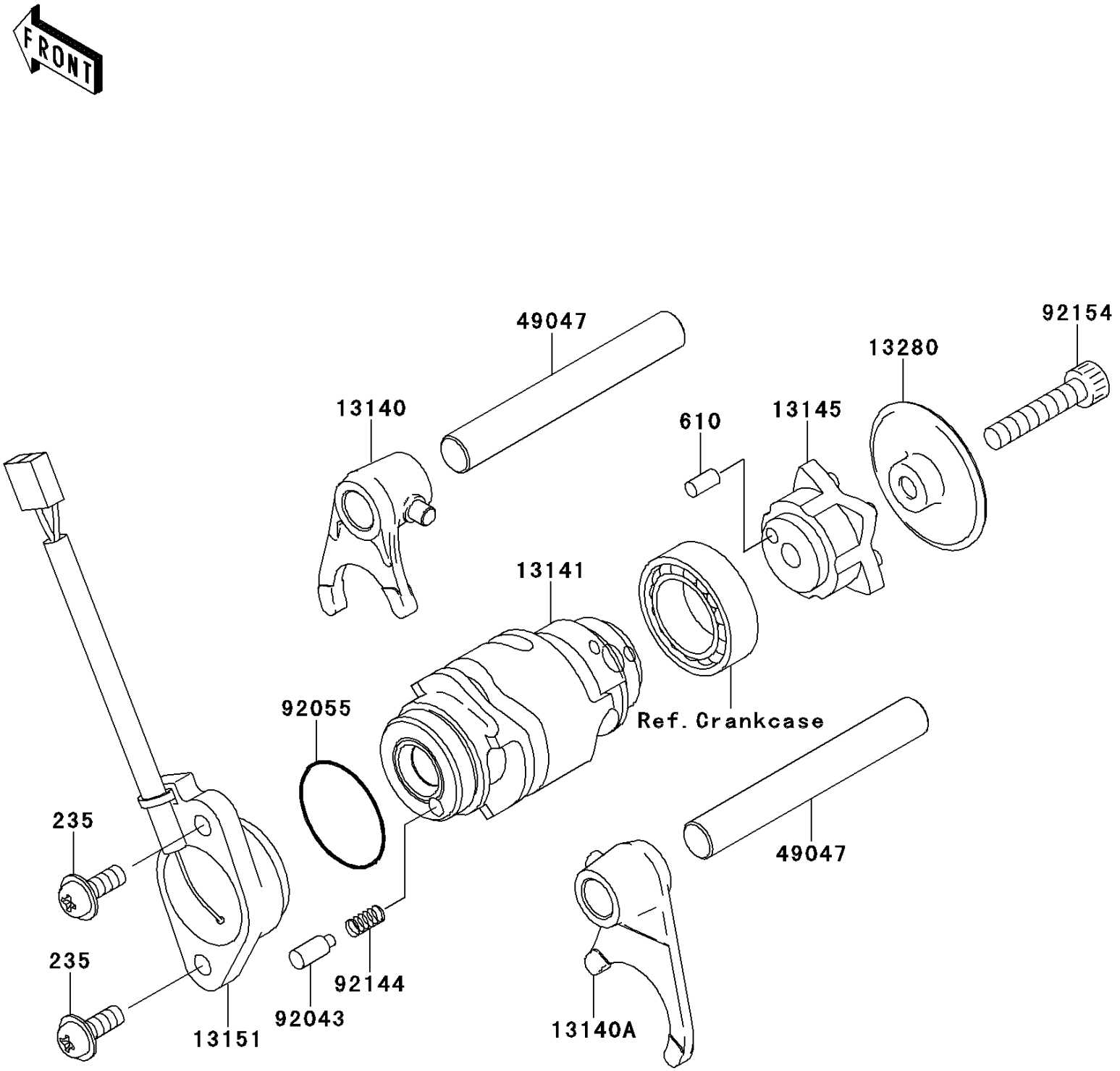

© 2026 Kawasaki Motors Corp., U.S.A.

2014 KLX®110L

PARTS LIST

Gear Change Drum/Shift Fork(s)

ITEM NAME	PART NUMBER	QUANTITY
SCREW-PAN-WP-CROS,5X14 (Ref # 235)	235AA0514	2
ROLLER,4X8 (Ref # 610)	610A0408	1
FORK-SHIFT (Ref # 13140)	13140-0036	1
FORK-SHIFT (Ref # 13140A)	13140-0037	1
DRUM-CHANGE (Ref # 13141)	13141-0053	1
CAM-CHANGE DRUM (Ref # 13145)	13145-0049	1
SWITCH-COMP (Ref # 13151)	13151-0051	1
HOLDER (Ref # 13280)	13280-1228	1
ROD-SHIFT (Ref # 49047)	49047-1058	2
PIN (Ref # 92043)	92043-1385	1
RING-O,27.7X2.4 (Ref # 92055)	92055-091	1
SPRING (Ref # 92144)	92144-1245	1
BOLT,SOCKET,6X30 (Ref # 92154)	92154-0388	1

© 2026 Kawasaki Motors Corp., U.S.A.