2008 KX™250F

PARTS DIAGRAM

Fenders

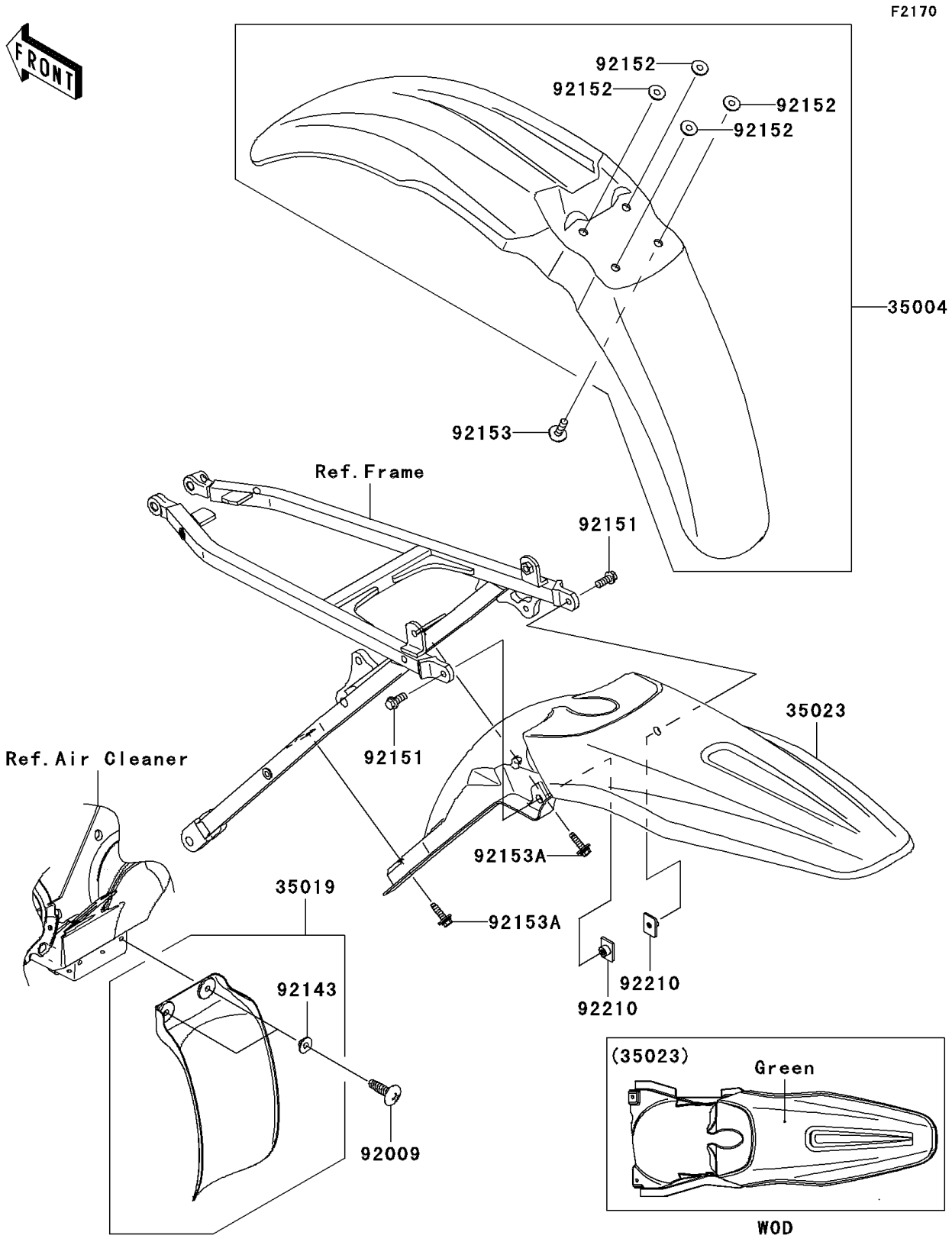

© 2026 Kawasaki Motors Corp., U.S.A.

2008 KX™250F

PARTS LIST

Fenders

ITEM NAME	PART NUMBER	QUANTITY
FENDER-FRONT,L.GREEN (Ref # 35004)	35004-0078-290	1
FLAP,AIR FILTER (Ref # 35019)	35019-0050	1
FENDER-REAR,L.GREEN (Ref # 35023)	35023-0100-290	1
SCREW,TAPPING,5X20 (Ref # 92009)	92009-1993	2
COLLAR (Ref # 92143)	92143-1087	2
BOLT,6X14 (Ref # 92151)	92151-1423	2
COLLAR (Ref # 92152)	92152-1422	4
BOLT,6X20 (Ref # 92153)	92153-0502	4
BOLT,FLANGED,6X23 (Ref # 92153A)	92153-1852	2
NUT,PLATE,6MM (Ref # 92210)	92210-1352	2

© 2026 Kawasaki Motors Corp., U.S.A.