2008 KX™250F

PARTS DIAGRAM

Radiator

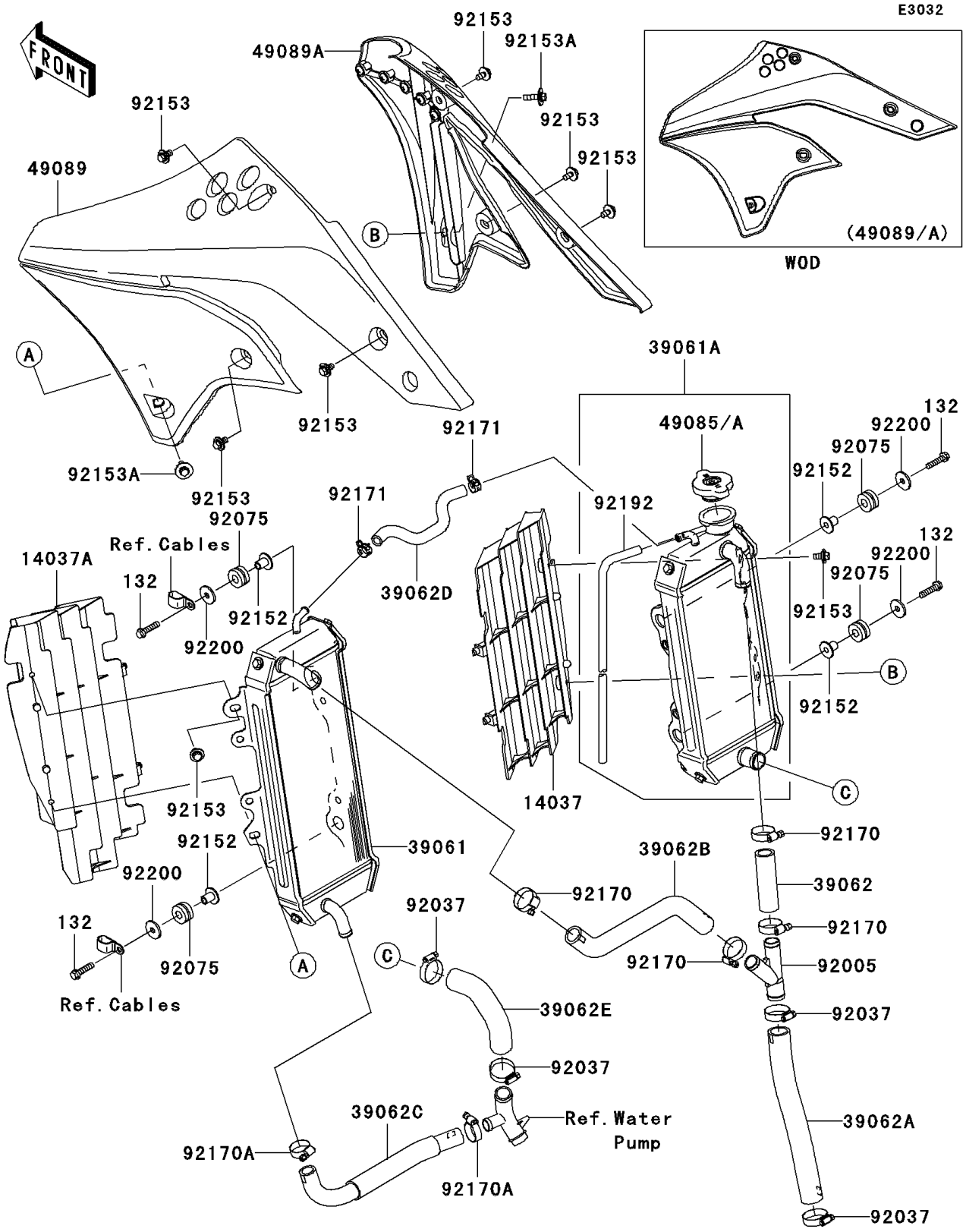

© 2026 Kawasaki Motors Corp., U.S.A.

2008 KX™250F

PARTS LIST

Radiator

Kawasaki
Let the Good Times Roll®

ITEM NAME	PART NUMBER	QUANTITY
BOLT-FLANGED-SMALL,6X25 (Ref # 132)	132L0625	4
SCREEN,RH,WHITE (Ref # 14037)	14037-0058-RZ	1
SCREEN,LH,WHITE (Ref # 14037A)	14037-0063-RZ	1
RADIATOR-ASSY,LH (Ref # 39061)	39061-0054	1
RADIATOR-ASSY,RH (Ref # 39061A)	39061-0074	1
HOSE-COOLING,FIT.-RAD. RH UPP (Ref # 39062)	39062-0085	1
HOSE-COOLING,HEAD-FIT (Ref # 39062A)	39062-0126	1
HOSE-COOLING,RAD LH-FIT (Ref # 39062B)	39062-0127	1
HOSE-COOLING,RAD LH-W/P (Ref # 39062C)	39062-0129	1
HOSE-COOLING,RAD LH-RAD RH (Ref # 39062D)	39062-0130	1
HOSE-COOLING,RAD RH-W/P (Ref # 39062E)	39062-0153	1
CAP-ASSY-PRESSURE,P1.1 (Ref # 49085)	49085-1070	1
CAP-ASSY-PRESSURE,P1.6 (Ref # 49085A)	49085-1073	1
SHROUD-ENGINE,LH,L.GREEN (Ref # 49089)	49089-0036-290	1
SHROUD-ENGINE,RH,L.GREEN (Ref # 49089A)	49089-0037-290	1
FITTING (Ref # 92005)	92005-0065	1
CLAMP,COOLING HOSE (Ref # 92037)	92037-1589	4
DAMPER (Ref # 92075)	92075-209	4
COLLAR,L=12.6,T=1.6 (Ref # 92152)	92152-0379	4
BOLT,6X12 (Ref # 92153)	92153-0503	8
BOLT,6X20 (Ref # 92153A)	92153-0864	2
CLAMP,HOSE,26MM (Ref # 92170)	92170-1077	4
CLAMP (Ref # 92170A)	92170-1283	2
CLAMP,CLIP,12.5MM (Ref # 92171)	92171-0372	2
TUBE,6X9X640 (Ref # 92192)	92192-0167	1
WASHER,6.5X22X2.3 (Ref # 92200)	92200-0271	4

© 2026 Kawasaki Motors Corp., U.S.A.