2007 Ninja® 650R

PARTS DIAGRAM

Rear Wheel/Chain

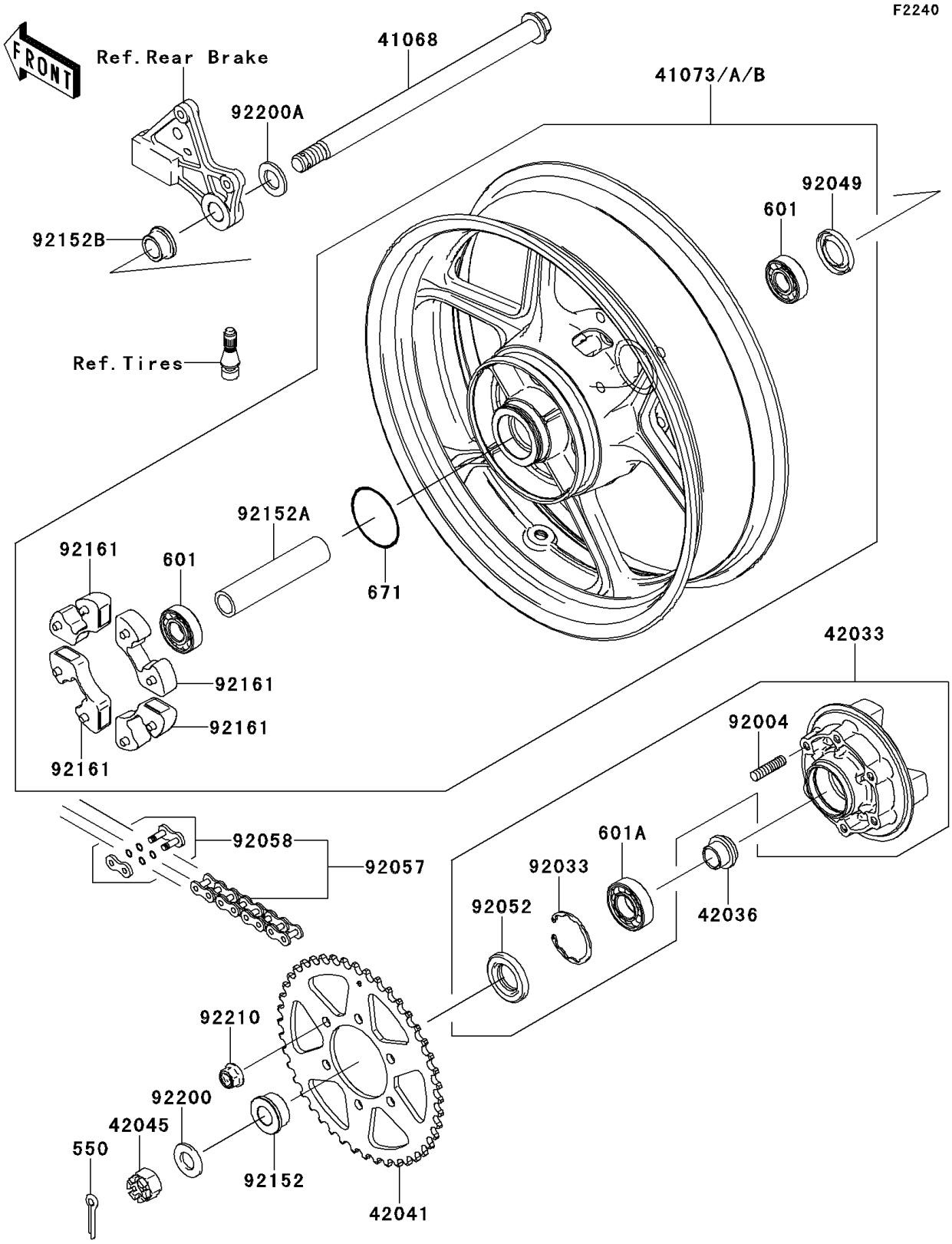

© 2026 Kawasaki Motors Corp., U.S.A.

2007 Ninja® 650R

PARTS LIST

Rear Wheel/Chain

Kawasaki
Let the Good Times Roll®

ITEM NAME	PART NUMBER	QUANTITY
PIN-COTTER,4.0X35 (Ref # 550)	550D4035	1
BEARING-BALL,6204UUC3 (Ref # 601)	601B6204UU	2
BEARING-BALL (Ref # 601A)	601B6205UU	1
O RING,60MM (Ref # 671)	671B2560	1
AXLE,RR (Ref # 41068)	41068-0053	1
WHEEL-ASSY,RR,BLACK (Ref # 41073)	41073-0051-R2	1
WHEEL-ASSY,RR,GRAYSTONE (Ref # 41073B)	41073-0051-2A	1
COUPLING-ASSY,RR HUB (Ref # 42033)	42033-0003	1
SLEEVE,RR HUB,L=23 (Ref # 42036)	42036-1251	1
SPROCKET-HUB,46T (Ref # 42041)	42041-0020	1
NUT,CASTLE,18MM (Ref # 42045)	42045-018	1
STUD,10X19 (Ref # 92004)	92004-0028	6
RING-SNAP,52MM (Ref # 92033)	92033-1043	1
SEAL-OIL,BJN28475 (Ref # 92049)	92049-1056	1
SEAL-OIL,TWC35527 (Ref # 92052)	92052-006	1
CHAIN,DRIVE,EK520MVXL1X114L (Ref # 92057)	92057-0101	1
JOINT-CHAIN,DRIVE (Ref # 92058)	92058-0007	1
COLLAR,RR AXLE,LH,L=18 (Ref # 92152)	92152-0118	1
COLLAR,RR HUB,L=133 (Ref # 92152A)	92152-0301	1
COLLAR,RR AXLE,RH,L=17 (Ref # 92152B)	92152-0302	1
DAMPER,SHOCK,RR HUB (Ref # 92161)	92161-0303	4
WASHER,19X36X3.2 (Ref # 92200)	92200-0296	1
WASHER,20.5X36X3.2 (Ref # 92200A)	92200-0297	1
NUT,LOCK,FLANGED,10MM (Ref # 92210)	92210-0276	6

© 2026 Kawasaki Motors Corp., U.S.A.