2014 Brute Force® 750 4x4i EPS

PARTS DIAGRAM

Engine Mount

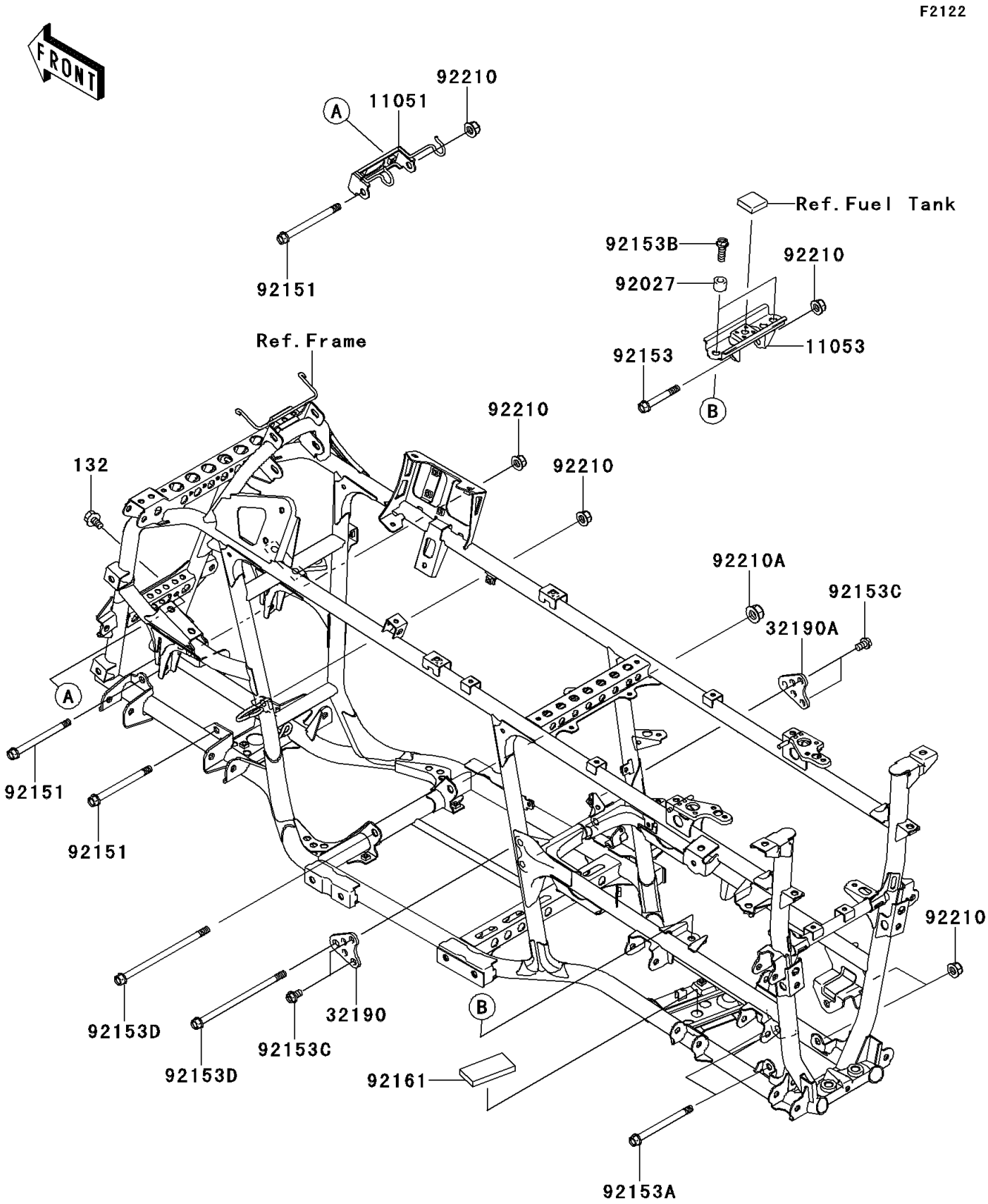

© 2026 Kawasaki Motors Corp., U.S.A.

2014 Brute Force® 750 4x4i EPS

PARTS LIST

Engine Mount

ITEM NAME	PART NUMBER	QUANTITY

© 2026 Kawasaki Motors Corp., U.S.A.