2010 Mule 610 4x4 Realtree APG HD

Kawasaki
Let the Good Times Roll®

PARTS DIAGRAM

Muffler(s)

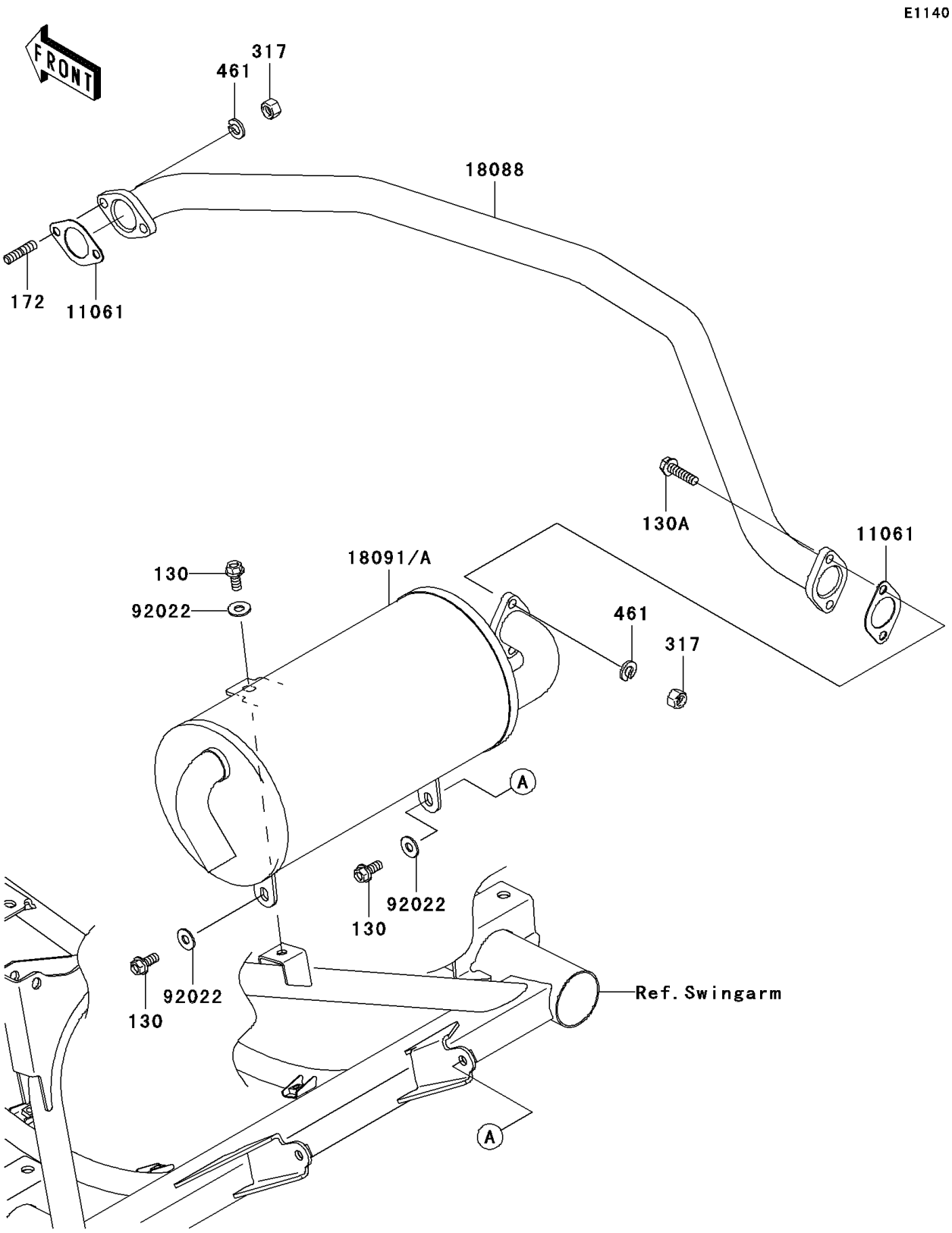

© 2026 Kawasaki Motors Corp., U.S.A.

2010 Mule 610 4x4 Realtree APG HD

Kawasaki
Let the Good Times Roll®

PARTS LIST

Muffler(s)

ITEM NAME	PART NUMBER	QUANTITY
BOLT-FLANGED,8X16 (Ref # 130)	130CB0816	3
BOLT-FLANGED,8X30 (Ref # 130A)	130CB0830	2
BOLT-STUD,8X18 (Ref # 172)	172BA0818	2
NUT-HEX-SMALL (Ref # 317)	317R0800	4
WASHER-SPRING,8MM (Ref # 461)	461DA0800	4
GASKET (Ref # 11061)	11061-0132	2
PIPE-EXHAUST (Ref # 18088)	18088-0191	1
WASHER,8.5X20X1.6,BLACK (Ref # 92022)	92022-1317	3
BODY-COMP-MUFFLER (Ref # 18091)	18091-0235	1
BODY-COMP-MUFFLER (Ref # 18091A)	18091-0487	1

© 2026 Kawasaki Motors Corp., U.S.A.