2008 KX™250F

PARTS DIAGRAM

Camshaft(s)/Tensioner

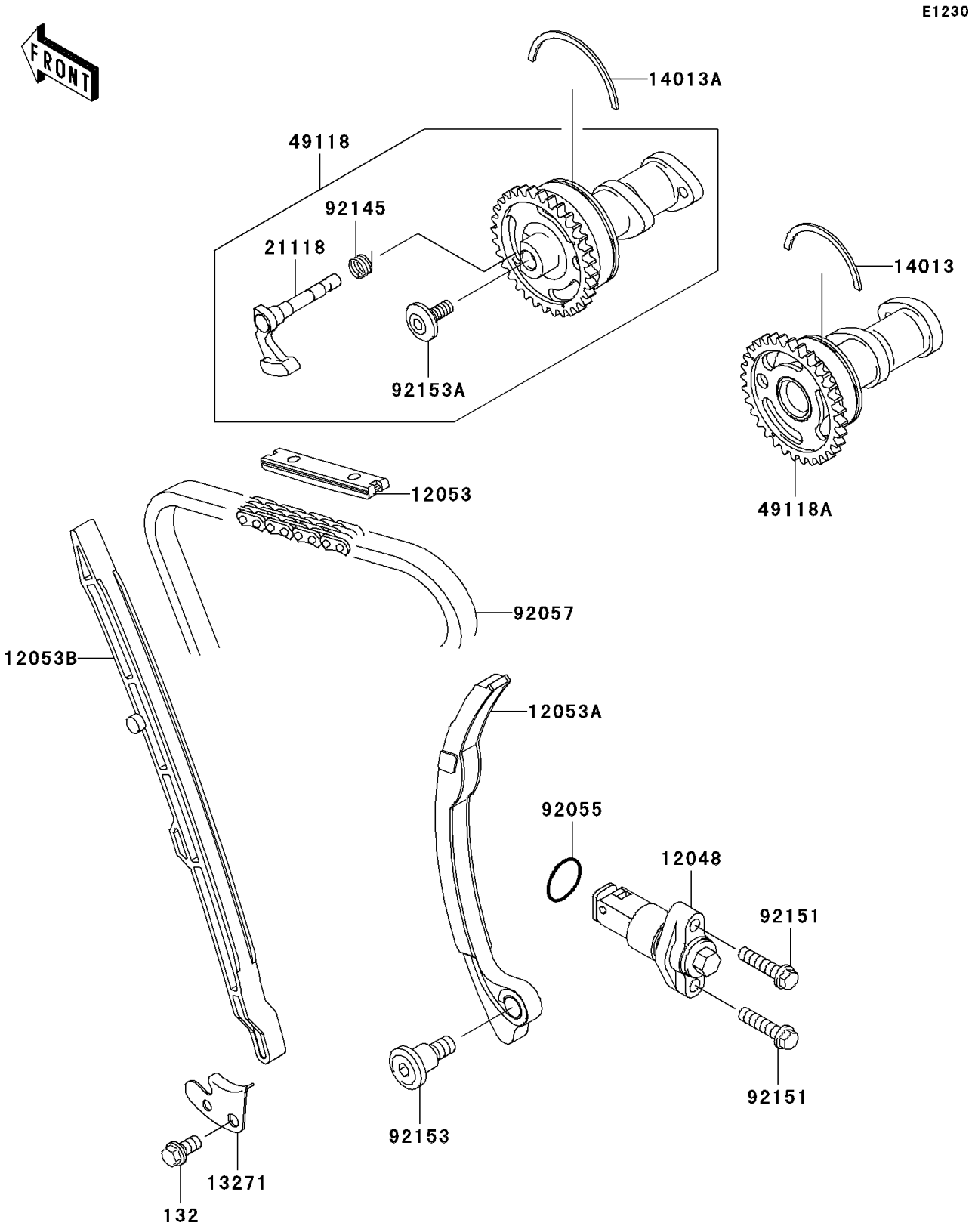

© 2026 Kawasaki Motors Corp., U.S.A.

2008 KX™250F

PARTS LIST

Camshaft(s)/Tensioner

ITEM NAME	PART NUMBER	QUANTITY
BOLT-FLANGED-SMALL,6X12 (Ref # 132)	132G0612	1
TENSIONER-ASSY (Ref # 12048)	12048-1181	1
GUIDE-CHAIN,UPP (Ref # 12053)	12053-0009	1
GUIDE-CHAIN,RR (Ref # 12053A)	12053-0010	1
GUIDE-CHAIN,FR (Ref # 12053B)	12053-0017	1
PLATE,CAM CHAIN STOPPER (Ref # 13271)	13271-0808	1
RING-POSITION (Ref # 14013)	14013-0001	1
RING-POSITION (Ref # 14013A)	14013-0002	1
DECOMPRESSOR (Ref # 21118)	21118-0004	1
CAMSHAFT-COMP,EXHAUST (Ref # 49118)	49118-0065	1
CAMSHAFT-COMP,INTAKE (Ref # 49118A)	49118-0066	1
RING-O,18.8X1.9 (Ref # 92055)	92055-086	1
CHAIN,CAM,92RH2010-114 (Ref # 92057)	92057-0030	1
SPRING,DECOMP (Ref # 92145)	92145-0365	1
BOLT,FLANGED-SMALL,6X25 (Ref # 92151)	92151-1930	2
BOLT,12X24.5 (Ref # 92153)	92153-0572	1
BOLT,SOCKET,6X16 (Ref # 92153A)	92153-0918	1

© 2026 Kawasaki Motors Corp., U.S.A.