Mule 3010 Diesel 4X4

PARTS DIAGRAM

Crankshaft/Piston(s)

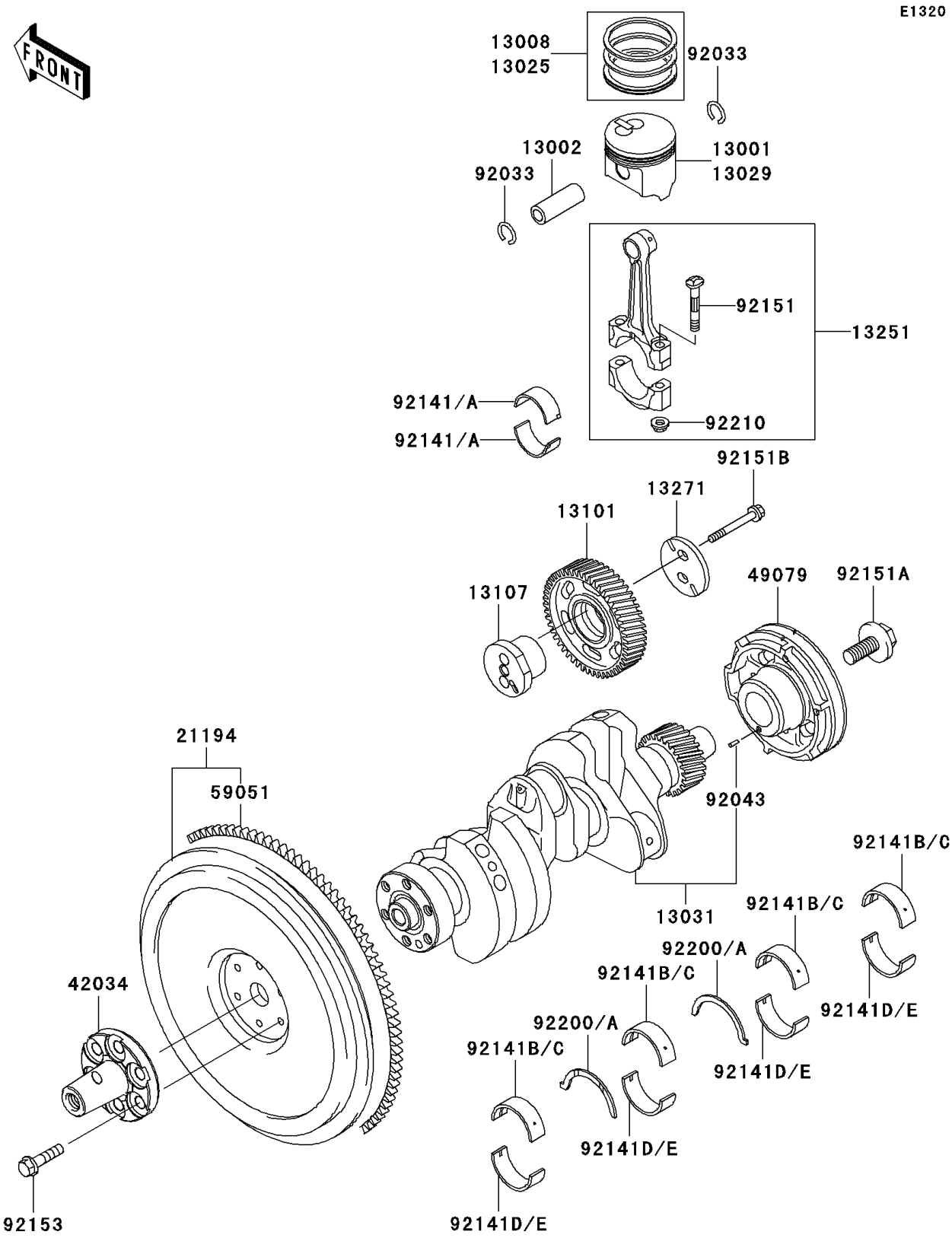

© 2026 Kawasaki Motors Corp., U.S.A.

Mule 3010 Diesel 4X4

PARTS LIST

Crankshaft/Piston(s)

ITEM NAME	PART NUMBER	QUANTITY
PISTON-ENGINE,STD (Ref # 13001)	13001-1571	3
PIN-PISTON (Ref # 13002)	13002-1118	3
RING-SET-PISTON,STD (Ref # 13008)	13008-1197	3
RING-SET-PISTON L,O/S 0.25 (Ref # 13025)	13025-1154	AR
PISTON-ENGINE L,O/S 0.25 (Ref # 13029)	13029-1279	AR
CRANKSHAFT-COMP (Ref # 13031)	13031-1497	1
GEAR-ASSY,IDLE (Ref # 13101)	13101-1292	1
SHAFT,IDLE GEAR (Ref # 13107)	13107-1431	1
ROD-ASSY-CONNECTING (Ref # 13251)	13251-1129	3
PLATE (Ref # 13271)	13271-1362	1
FLYWHEEL-COMP (Ref # 21194)	21194-1055	1
COUPLING (Ref # 42034)	42034-1197	1
PULLEY-BELT (Ref # 49079)	49079-1061	1
GEAR-SPUR,FLYWHEEL (Ref # 59051)	59051-1388	1
RING-SNAP,PISTON (Ref # 92033)	92033-1314	6
PIN,CRANKSHAFT GEAR (Ref # 92043)	92043-1612	1
BUSHING,CONNECTING ROD,STD (Ref # 92141)	92141-1054	6
BUSHING,CONNECTING ROD,U/S (Ref # 92141A)	92141-1055	AR
BUSHING,CRANKSHAFT,UPP,STD (Ref # 92141B)	92141-1056	4
BUSHING,CRANKSHAFT,UPP,U/S (Ref # 92141C)	92141-1057	AR
BUSHING,CRANKSHAFT,LWR,STD (Ref # 92141D)	92141-1058	4
BUSHING,CRANKSHAFT,LWR,U/S (Ref # 92141E)	92141-1059	AR
BOLT,CONNECTING ROD (Ref # 92151)	92151-1671	6
BOLT,PULLEY (Ref # 92151A)	92151-1672	1
BOLT,8X45 (Ref # 92151B)	92151-1674	2
BOLT,10X33 (Ref # 92153)	92153-0308	6
WASHER,THRUST,STD (Ref # 92200)	92200-1498	2
WASHER,THRUST,O/S 0.125 (Ref # 92200A)	92200-1499	AR
NUT,CONNECTING ROD (Ref # 92210)	92210-1212	6

© 2026 Kawasaki Motors Corp., U.S.A.