Mule 3000

PARTS DIAGRAM

Fuel Pump

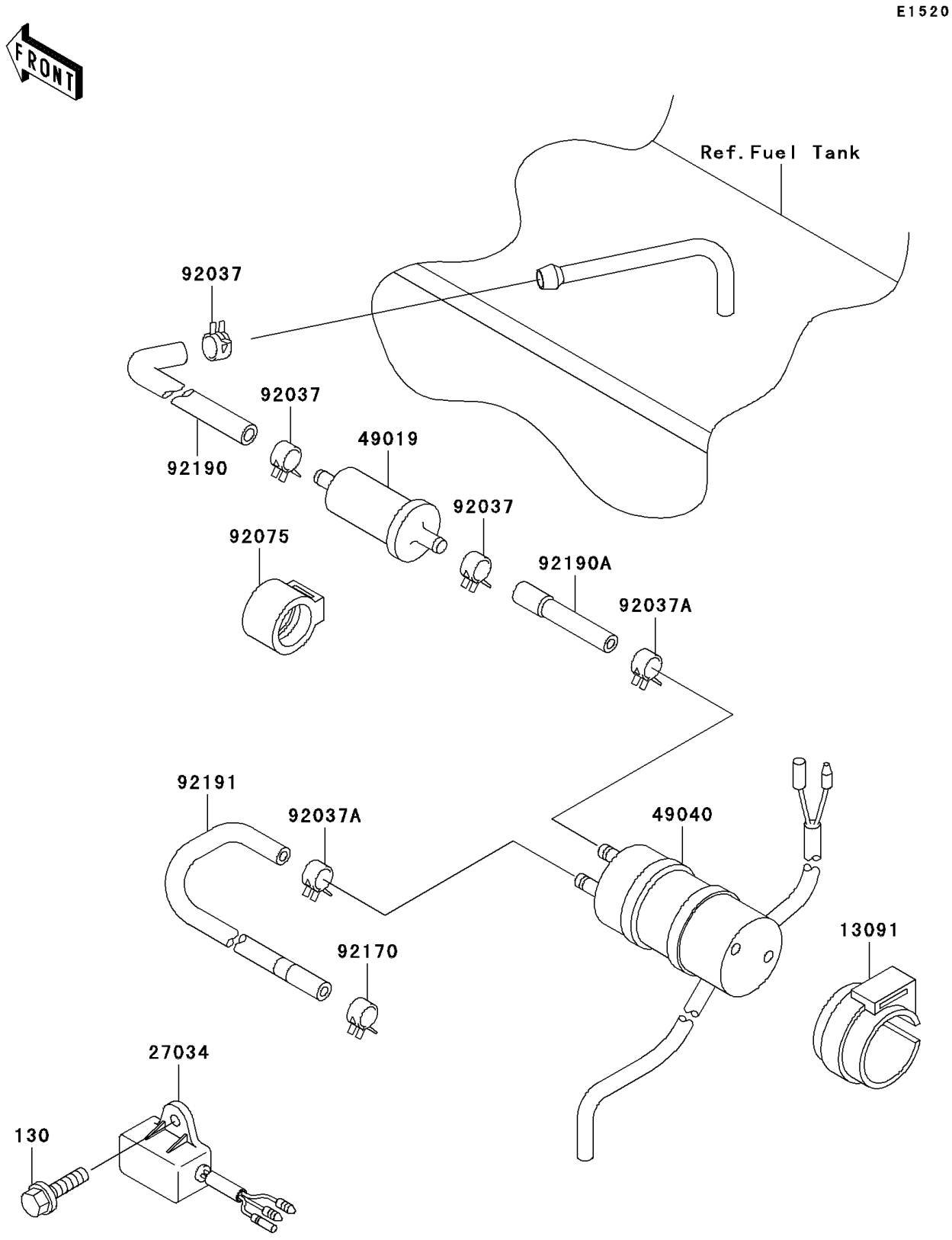

© 2026 Kawasaki Motors Corp., U.S.A.

Mule 3000

PARTS LIST

Fuel Pump

ITEM NAME	PART NUMBER	QUANTITY
BOLT-FLANGED,6X14,BLACK (Ref # 130)	130J0614	1
HOLDER (Ref # 13091)	13091-1512	1
RELAY,FUEL CUT (Ref # 27034)	27034-1053	1
FILTER-FUEL (Ref # 49019)	49019-1055	1
PUMP-FUEL (Ref # 49040)	49040-1055	1
CLAMP (Ref # 92037)	92037-1181	3
CLAMP,TUBE (Ref # 92037A)	92037-1505	2
DAMPER,FUEL FILTER (Ref # 92075)	92075-1853	1
CLAMP (Ref # 92170)	92170-2082	1
TUBE,8X13X370 (Ref # 92190)	92190-1325	1
TUBE,FILTER-PUMP (Ref # 92190A)	92190-1437	1
TUBE (Ref # 92191)	92191-1479	1

© 2026 Kawasaki Motors Corp., U.S.A.