Mule 2500

PARTS DIAGRAM

Steering Wheel

F2311

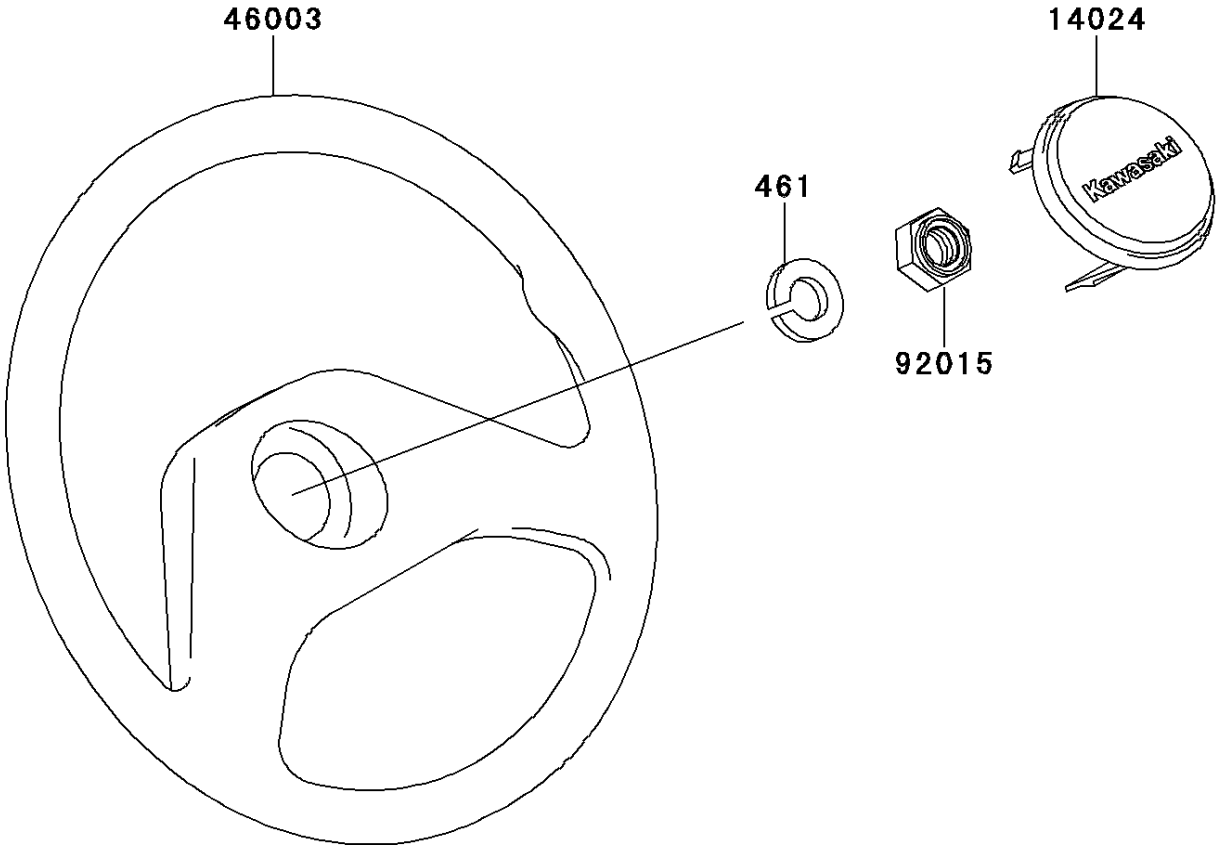

© 2026 Kawasaki Motors Corp., U.S.A.

Mule 2500

PARTS LIST

Steering Wheel

ITEM NAME	PART NUMBER	QUANTITY
WASHER-SPRING,12MM (Ref # 461)	461F1200	1
COVER,STEERING WHEEL (Ref # 14024)	14024-1574	1
HANDLE,STEERING (Ref # 46003)	46003-1265	1
NUT,LOCK,12MM (Ref # 92015)	92015-1774	1

© 2026 Kawasaki Motors Corp., U.S.A.