2012 TERYX® 750 FI 4x4

PARTS DIAGRAM

Generator

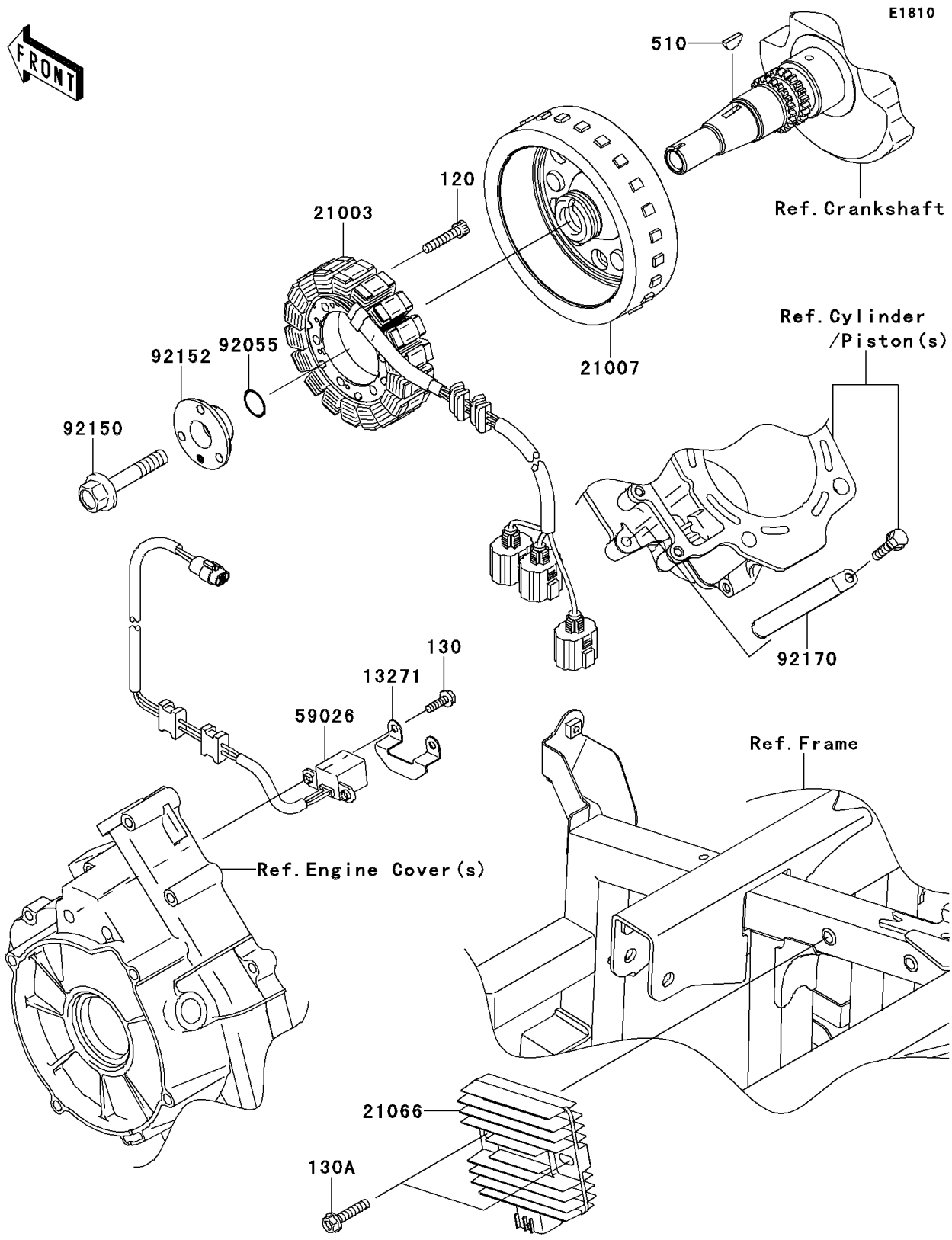

© 2026 Kawasaki Motors Corp., U.S.A.

2012 TERYX® 750 FI 4x4

PARTS LIST

Generator

ITEM NAME	PART NUMBER	QUANTITY

© 2026 Kawasaki Motors Corp., U.S.A.