# 2010 KLX®110

## PARTS DIAGRAM

### Cables

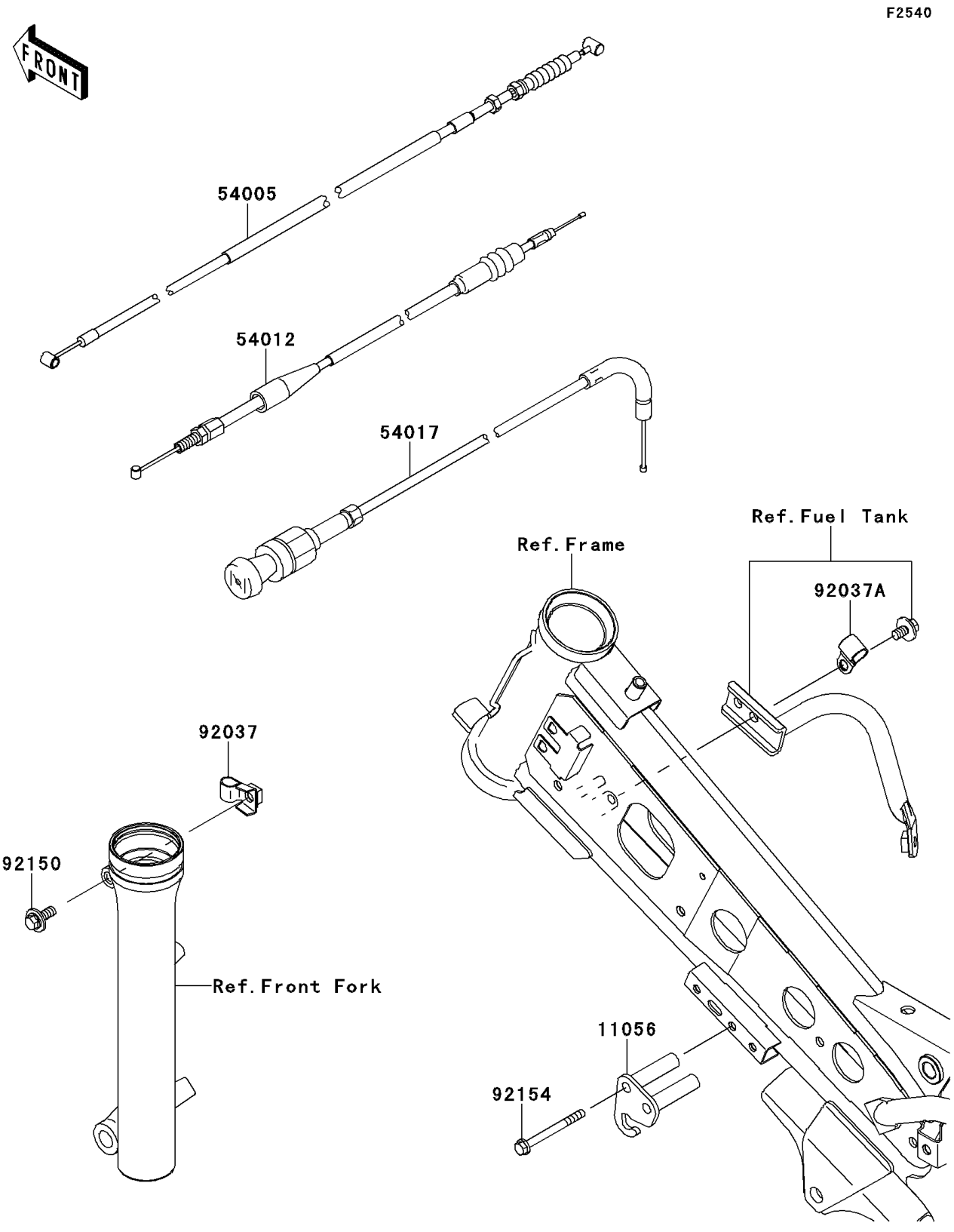


© 2026 Kawasaki Motors Corp., U.S.A.

# 2010 KLX®110

## PARTS LIST

### Cables

| ITEM NAME | PART NUMBER | QUANTITY |
|---|---|---|
| BRACKET,CHOKE (Ref # 11056) | 11056-0151 | 1 |
| CABLE-BRAKE (Ref # 54005) | 54005-0026 | 1 |
| CABLE-THROTTLE (Ref # 54012) | 54012-0287 | 1 |
| CABLE-STARTER (Ref # 54017) | 54017-1218 | 1 |
| CLAMP,BRAKE CABLE (Ref # 92037) | 92037-1353 | 1 |
| CLAMP (Ref # 92037A) | 92037-1608 | 1 |
| BOLT,FLANGED,6X16 (Ref # 92150) | 92150-1506 | 1 |
| BOLT,FLANGED,5X53 (Ref # 92154) | 92154-0374 | 2 |

© 2026 Kawasaki Motors Corp., U.S.A.