2010 KLX®110

PARTS DIAGRAM

Front Hub

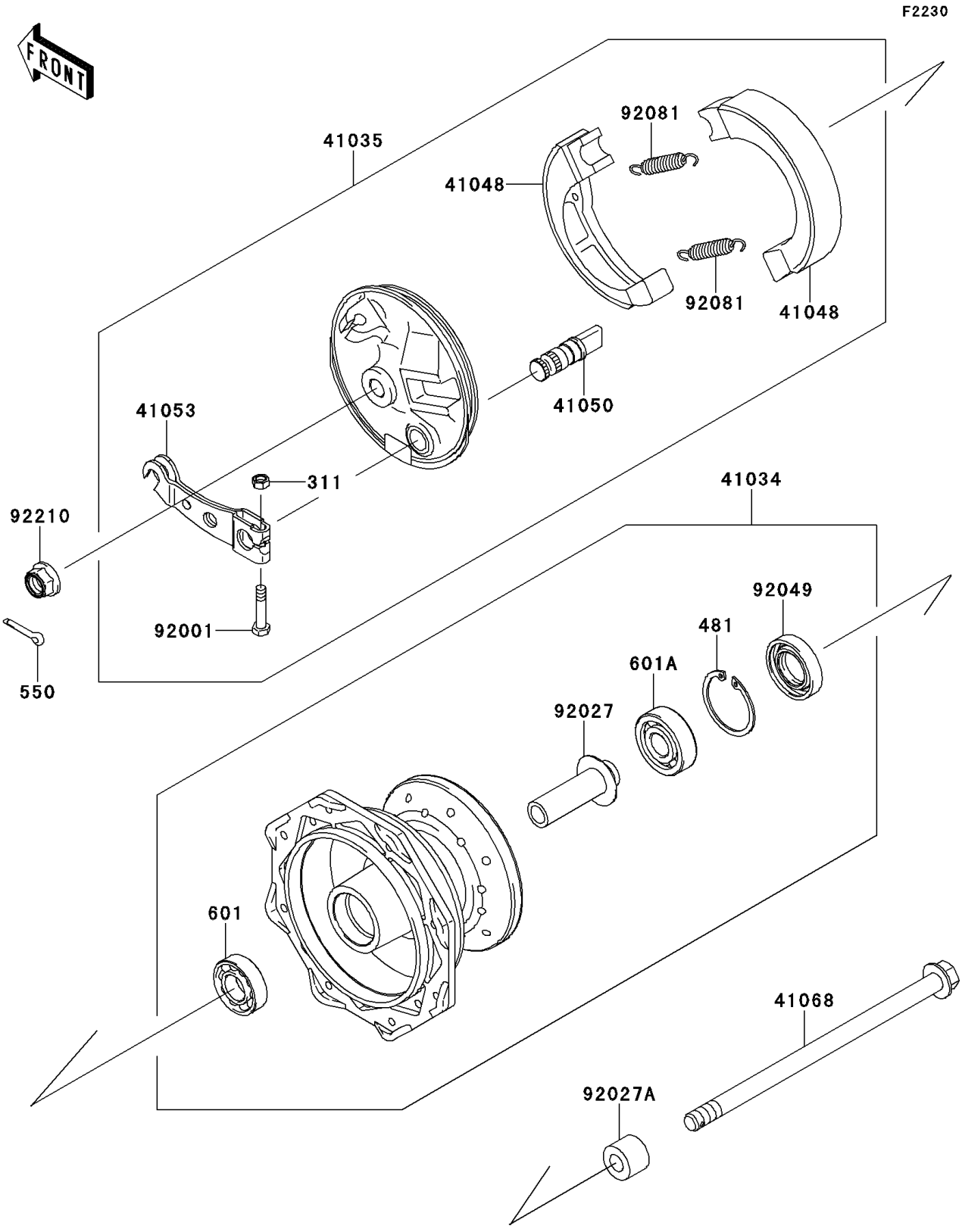

© 2026 Kawasaki Motors Corp., U.S.A.

2010 KLX®110

PARTS LIST

Front Hub

ITEM NAME	PART NUMBER	QUANTITY
NUT-HEX (Ref # 311)	311BA0500	1
CIRCLIP-TYPE-C,35MM (Ref # 481)	481J3500	1
PIN-COTTER,2.5X20 (Ref # 550)	550S2520	1
BEARING-BALL,#6200UUC3 (Ref # 601)	601B6200UU	1
BEARING-BALL,#6300UUC3 (Ref # 601A)	601B6300UU	1
DRUM-ASSY,FRONT BRAKE (Ref # 41034)	41034-1343	1
PANEL-ASSY-BRAKE,FR (Ref # 41035)	41035-1543	1
SHOE-BRAKE (Ref # 41048)	41048-1083	2
CAM-BRAKE (Ref # 41050)	41050-1031	1
LEVER-BRAKE CAM,FR (Ref # 41053)	41053-1027	1
AXLE,FR (Ref # 41068)	41068-0015	1
BOLT,5X25 (Ref # 92001)	92001-1695	1
COLLAR,FRONT DRUM,L=54 (Ref # 92027)	92027-1470	1
COLLAR,FRONT AXLE,L=14.5 (Ref # 92027A)	92027-1472	1
SEAL-OIL,DD20X35X7 (Ref # 92049)	92049-0052	1
SPRING,BRAKE SHOE (Ref # 92081)	92081-1564	2
NUT,LOCK,FLANGED,10MM (Ref # 92210)	92210-0276	1

© 2026 Kawasaki Motors Corp., U.S.A.