# 2010 KLX®110

## PARTS DIAGRAM

### Engine Mount

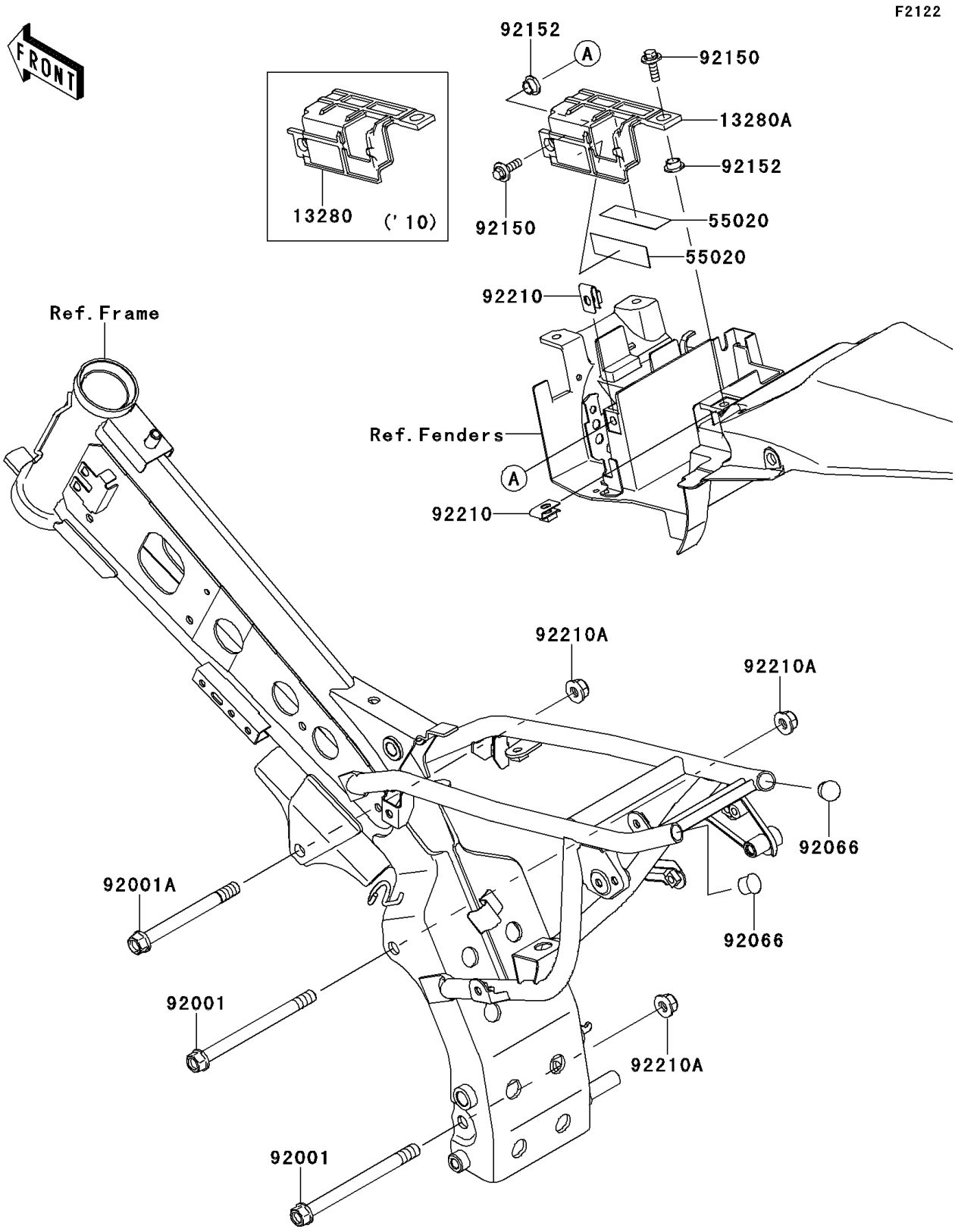


© 2026 Kawasaki Motors Corp., U.S.A.

# 2010 KLX®110

## PARTS LIST

### Engine Mount

| ITEM NAME | PART NUMBER | QUANTITY |
|---|---|---|
| HOLDER,BATTERY (Ref # 13280) | 13280-0341 | 1 |
| GUARD (Ref # 55020) | 55020-0527 | 2 |
| BOLT,FLANGED,10X125 (Ref # 92001) | 92001-1720 | 2 |
| BOLT,FLANGED,10X105,BLACK (Ref # 92001A) | 92001-1751 | 1 |
| PLUG (Ref # 92066) | 92066-1081 | 2 |
| BOLT,FLANGED,6X20 (Ref # 92150) | 92150-1339 | 2 |
| COLLAR (Ref # 92152) | 92152-0789 | 2 |
| NUT,6MM (Ref # 92210) | 92210-0218 | 2 |
| NUT,LOCK,FLANGED,10MM (Ref # 92210A) | 92210-1081 | 3 |

© 2026 Kawasaki Motors Corp., U.S.A.