2010 KLX®110

PARTS DIAGRAM

Carburetor

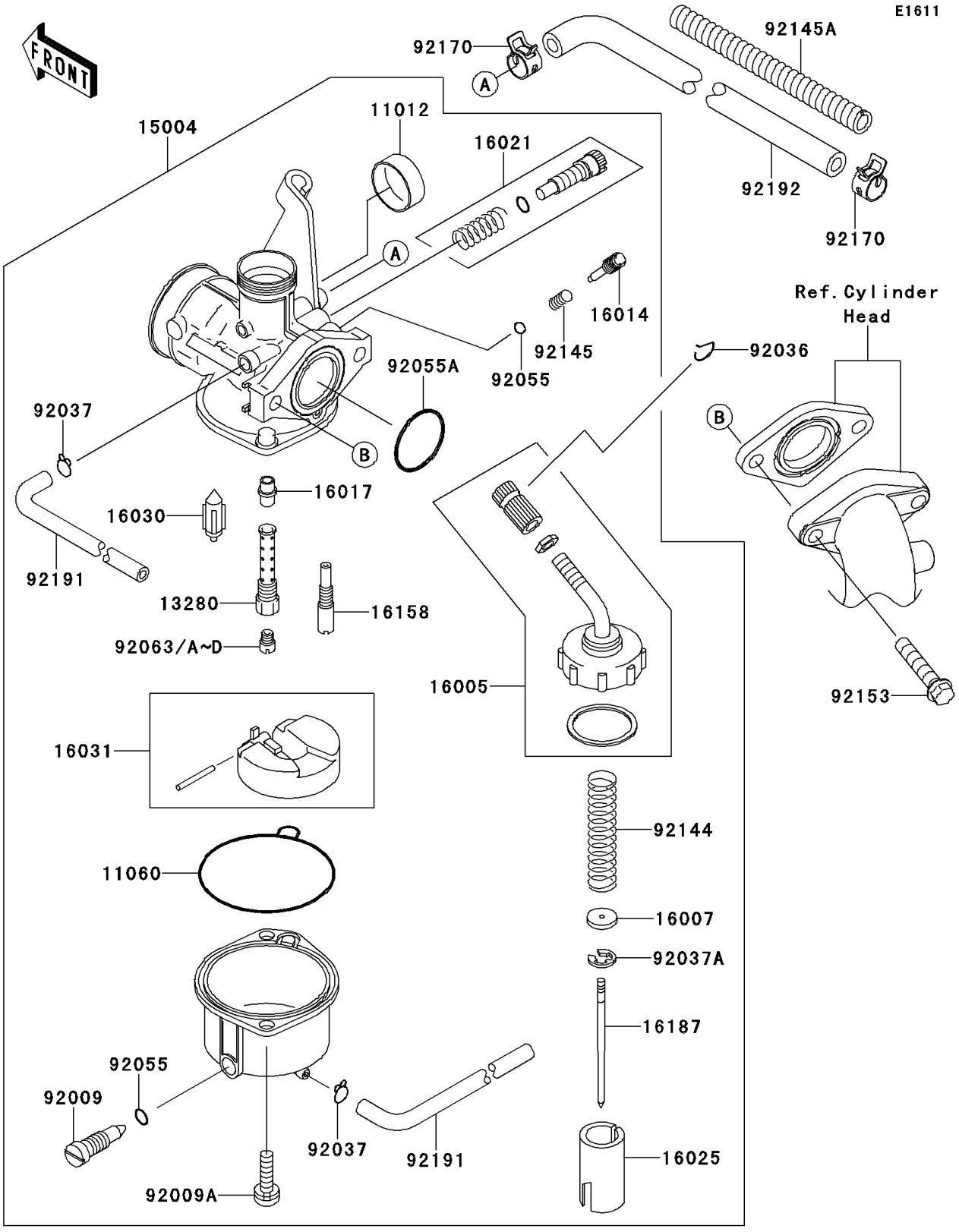

© 2026 Kawasaki Motors Corp., U.S.A.

2010 KLX®110

PARTS LIST

Carburetor

ITEM NAME	PART NUMBER	QUANTITY
CAP,CHOKE (Ref # 11012)	11012-1940	1
GASKET,FLOAT CHAMBER (Ref # 11060)	11060-1700	1
HOLDER,NEEDLE JET (Ref # 13280)	13280-0359	1
CARBURETOR-ASSY,PB18 (Ref # 15004)	15004-0065	1
TOP-CHAMBER (Ref # 16005)	16005-1091	1
SEAT-SPRING (Ref # 16007)	16007-1103	1
SCREW-PILOT AIR (Ref # 16014)	16014-0011	1
JET-NEEDLE (Ref # 16017)	16017-1434	1
SCREW-THROTTLE STOP (Ref # 16021)	16021-1241	1
VALVE-THROTTLE,CA3.0 (Ref # 16025)	16025-1209	1
VALVE-FLOAT,FLOAT (Ref # 16030)	16030-0002	1
FLOAT (Ref # 16031)	16031-1088	1
JET-SLOW,#40 (Ref # 16158)	16158-0005	1
NEEDLE-JET,NCFA (Ref # 16187)	16187-1228	1
SCREW,DRAIN (Ref # 92009)	92009-1057	1
SCREW (Ref # 92009A)	92009-1750	2
RING-SNAP (Ref # 92036)	92036-018	1
CLAMP,TUBE (Ref # 92037)	92037-1142	2
CLAMP,JET NEEDLE (Ref # 92037A)	92037-1401	1
RING-O (Ref # 92055)	92055-1053	2
RING-O (Ref # 92055A)	92055-1541	1
JET-MAIN,#78 (Ref # 92063)	92063-1393	1
JET-MAIN,#72 (Ref # 92063A)	92063-1394	AR
JET-MAIN,#75 (Ref # 92063B)	92063-1395	AR
JET-MAIN,#80 (Ref # 92063C)	92063-1396	AR
JET-MAIN,#82 (Ref # 92063D)	92063-1397	AR
SPRING,THROTTLE (Ref # 92144)	92144-1875	1
SPRING (Ref # 92145)	92145-0004	1
SPRING,HOSE PROTECTER (Ref # 92145A)	92145-1481	1

© 2026 Kawasaki Motors Corp., U.S.A.

2010 KLX®110

PARTS LIST

Carburetor

ITEM NAME	PART NUMBER	QUANTITY
BOLT,FLANGED-SMALL,6X28 (Ref # 92153)	92153-1309	2
CLAMP (Ref # 92170)	92170-1872	2
TUBE,3.5X6.5X418 (Ref # 92191)	92191-1735	2
TUBE,5.8X10.8X277 (Ref # 92192)	92192-0583	1

© 2026 Kawasaki Motors Corp., U.S.A.