2010 KLX®110

PARTS DIAGRAM

Gear Change Mechanism

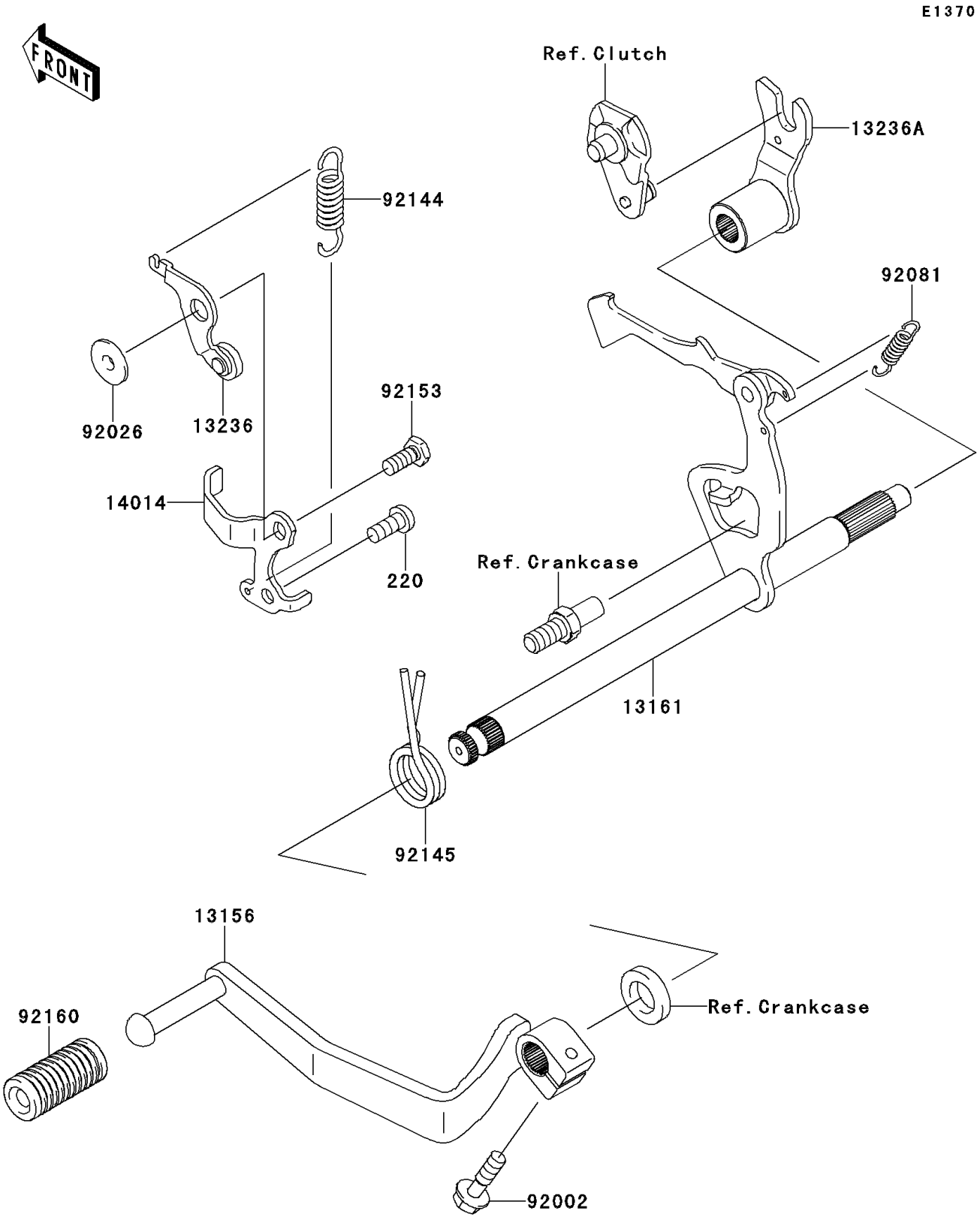

© 2026 Kawasaki Motors Corp., U.S.A.

2010 KLX®110

PARTS LIST

Gear Change Mechanism

ITEM NAME	PART NUMBER	QUANTITY
SCREW-PAN-CROS,6X14 (Ref # 220)	220AA0614	1
LEVER-CHANGE (Ref # 13156)	13156-0144	1
LEVER-COMP-CHANGE SHAFT (Ref # 13161)	13161-0019	1
LEVER-COMP,POSITION (Ref # 13236)	13236-1256	1
LEVER-COMP (Ref # 13236A)	13236-1288	1
PLATE-POSITION (Ref # 14014)	14014-0037	1
BOLT,6X20 (Ref # 92002)	92002-1237	1
SPACER (Ref # 92026)	92026-1217	1
SPRING,CHANGE LEVER (Ref # 92081)	92081-076	1
SPRING (Ref # 92144)	92144-1590	1
SPRING (Ref # 92145)	92145-0757	1
BOLT,6X14 (Ref # 92153)	92153-0571	1
DAMPER,CHANGE PEDAL (Ref # 92160)	92160-1036	1

© 2026 Kawasaki Motors Corp., U.S.A.