2010 KLX®110

PARTS DIAGRAM

Clutch

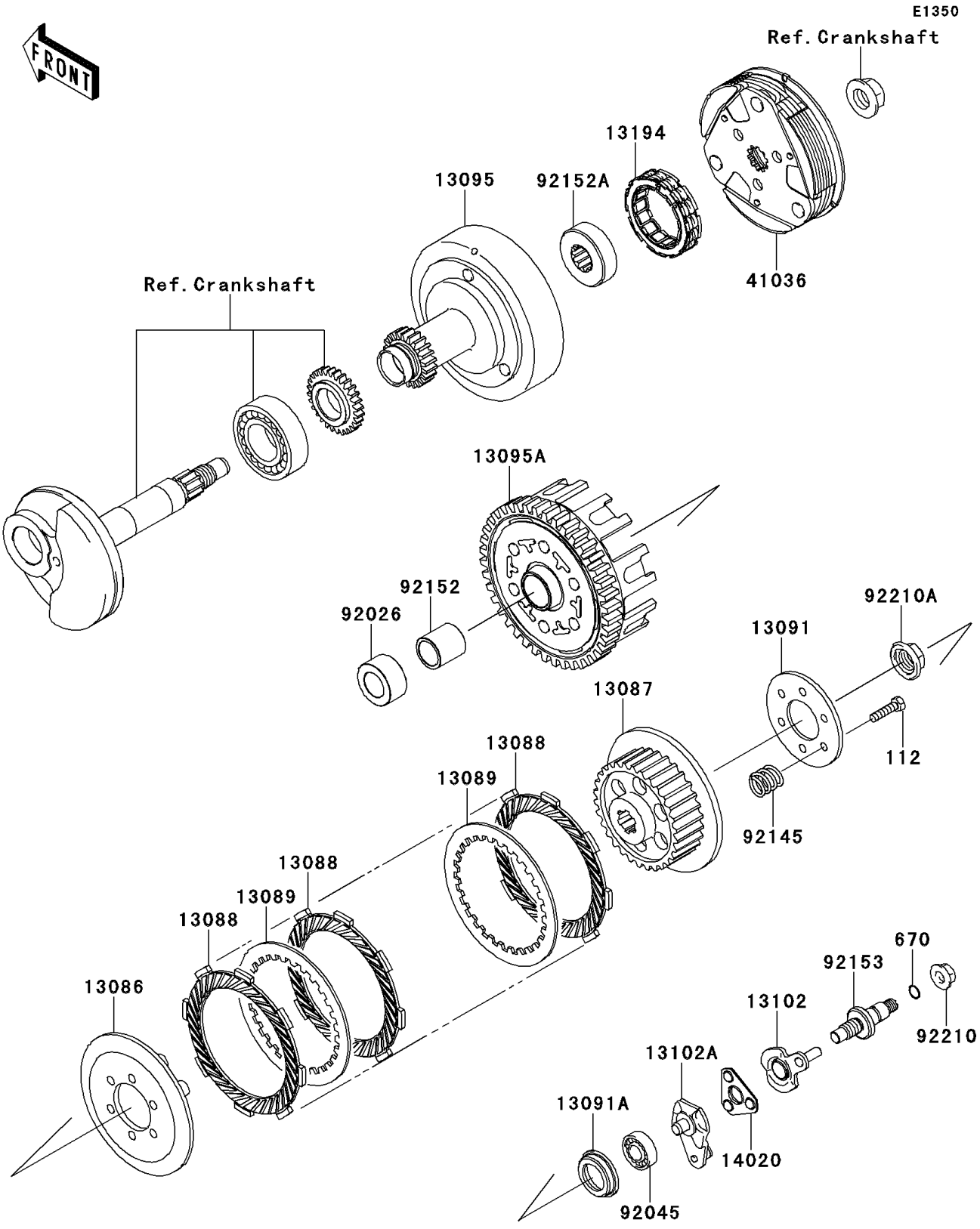

© 2026 Kawasaki Motors Corp., U.S.A.

2010 KLX®110

PARTS LIST

Clutch

ITEM NAME	PART NUMBER	QUANTITY
BOLT-UPSET,5X20 (Ref # 112)	112BA0520	6
O RING,8MM (Ref # 670)	670B1508	1
WHEEL-CLUTCH (Ref # 13086)	13086-1065	1
HUB-CLUTCH (Ref # 13087)	13087-1151	1
PLATE-FRICTION (Ref # 13088)	13088-1142	5
PLATE-CLUTCH (Ref # 13089)	13089-1087	4
HOLDER,CLUTCH (Ref # 13091)	13091-1782	1
HOLDER (Ref # 13091A)	13091-1787	1
HOUSING-COMP-CLUTCH (Ref # 13095)	13095-0128	1
HOUSING-COMP-CLUTCH (Ref # 13095A)	13095-1403	1
RELEASE-COMP-CLUTCH (Ref # 13102)	13102-1135	1
RELEASE-COMP-CLUTCH (Ref # 13102A)	13102-1136	1
CLUTCH-ONEWAY (Ref # 13194)	13194-1103	1
RETAINER (Ref # 14020)	14020-1100	1
HUB-ASSY,CLUTCH (Ref # 41036)	41036-1364	1
SPACER (Ref # 92026)	92026-1605	1
BEARING-BALL,#628 (Ref # 92045)	92045-1123	1
SPRING (Ref # 92145)	92145-0744	6
COLLAR,17X22X22.7 (Ref # 92152)	92152-0393	1
COLLAR,19X39.9X13 (Ref # 92152A)	92152-1370	1
BOLT,CLUTCH RELEASE (Ref # 92153)	92153-0525	1
NUT,FLANGED,8MM (Ref # 92210)	92210-0004	1
NUT,14MM (Ref # 92210A)	92210-1374	1

© 2026 Kawasaki Motors Corp., U.S.A.