2010 KLX®110

PARTS DIAGRAM

Valve(s)

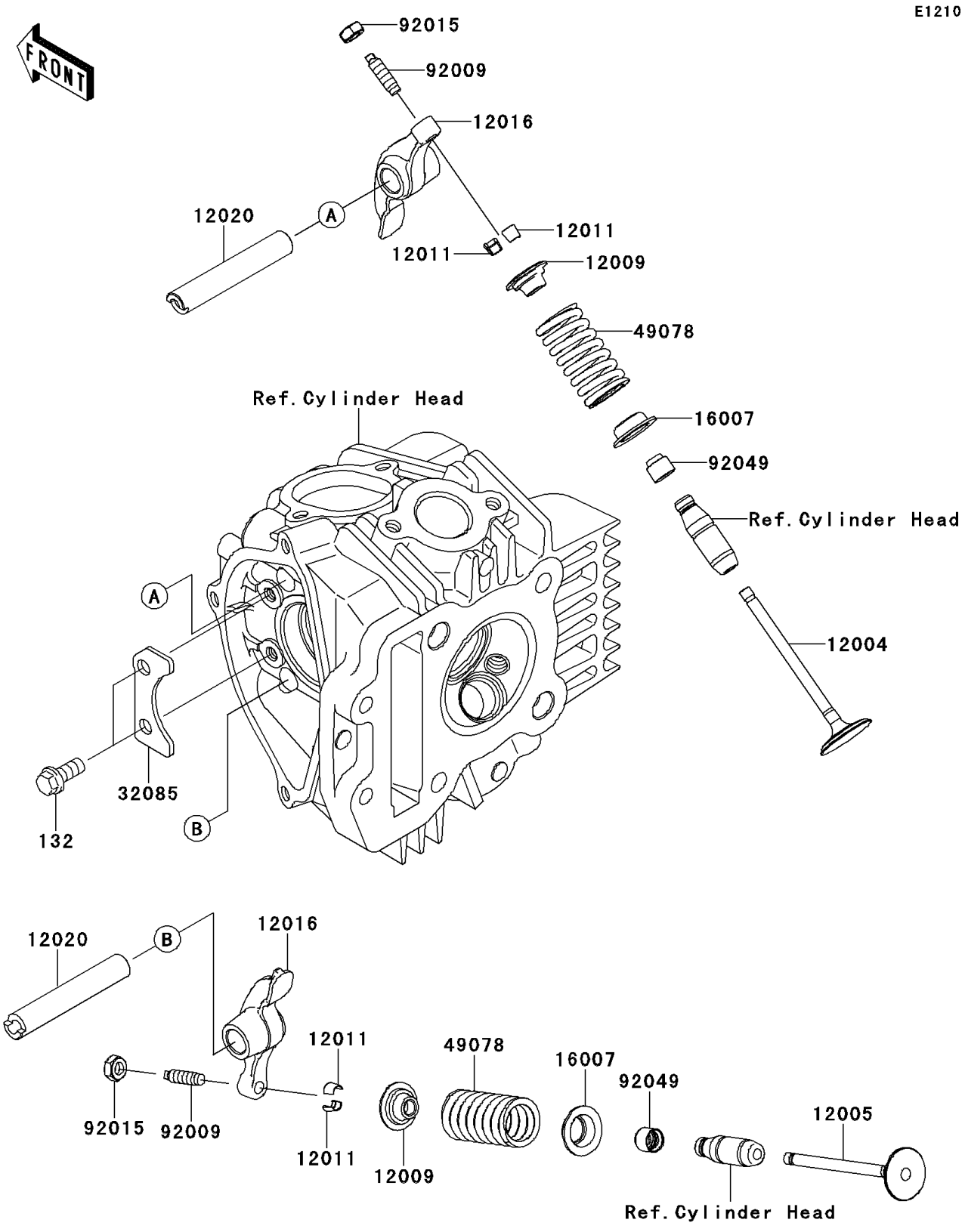

© 2026 Kawasaki Motors Corp., U.S.A.

2010 KLX®110

PARTS LIST

Valve(s)

ITEM NAME	PART NUMBER	QUANTITY
BOLT-FLANGED-SMALL,6X14 (Ref # 132)	132BA0614	2
VALVE-INTAKE (Ref # 12004)	12004-0045	1
VALVE-EXHAUST (Ref # 12005)	12005-0058	1
RETAINER-VALVE SPRING (Ref # 12009)	12009-1073	2
COLLET (Ref # 12011)	12011-1053	4
ARM-ROCKER (Ref # 12016)	12016-0001	2
SHAFT-ROCKER (Ref # 12020)	12020-0010	2
SEAT-SPRING,VALVE (Ref # 16007)	16007-1187	2
STOPPER (Ref # 32085)	32085-0107	1
SPRING-ENGINE VALVE (Ref # 49078)	49078-1151	2
SCREW,VALVE ADJUST (Ref # 92009)	92009-1109	2
NUT,VALVE ADJUST LOCK (Ref # 92015)	92015-1137	2
SEAL-OIL,VSB 4.3 7.5 5.3 8.3 (Ref # 92049)	92049-1349	2

© 2026 Kawasaki Motors Corp., U.S.A.