2015 NINJA® ZX™-14R ABS 30TH ANNIVERSARY

Kawasaki
Let the Good Times Roll®

PARTS DIAGRAM

Tires

F2210

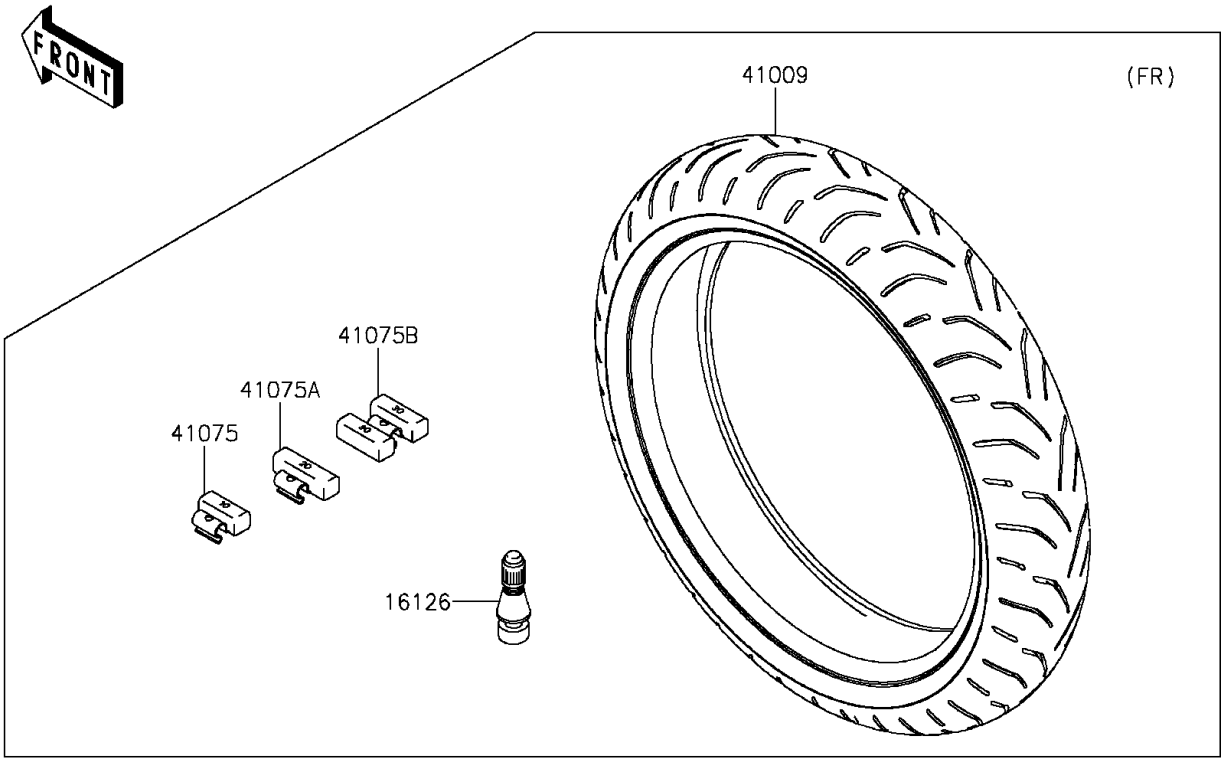

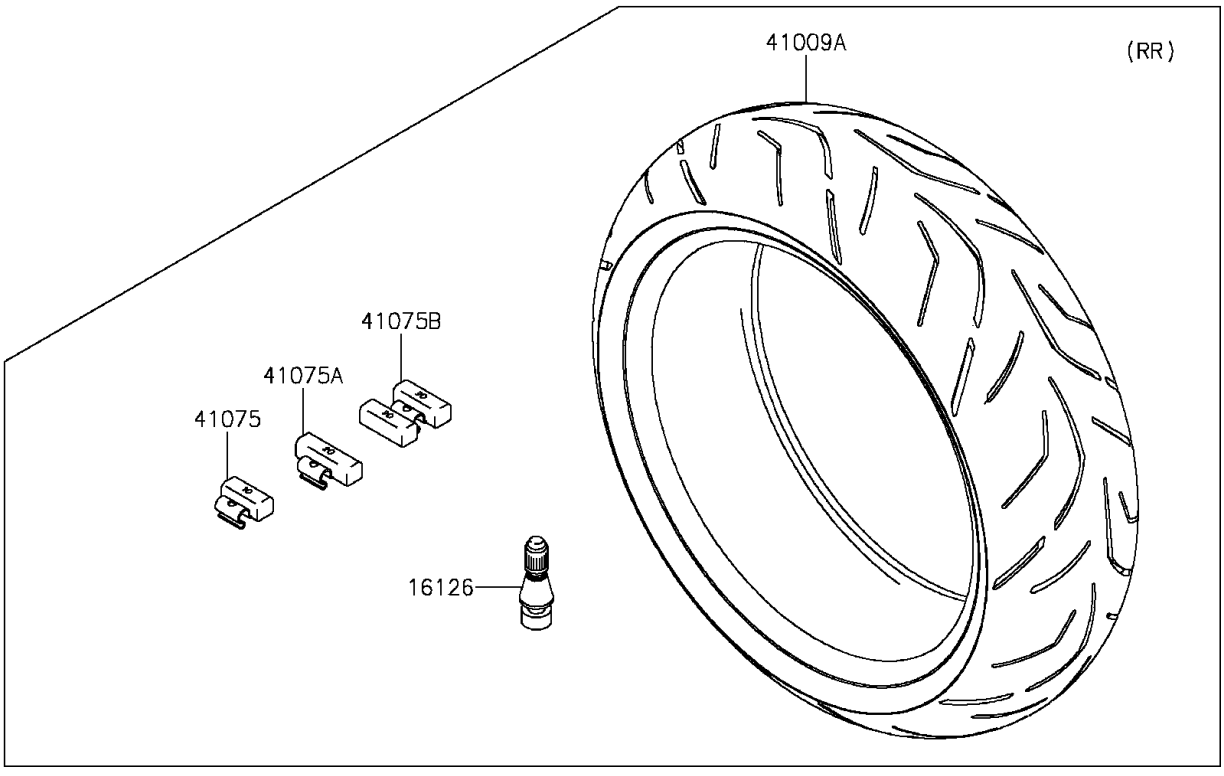

© 2026 Kawasaki Motors Corp., U.S.A.

2015 NINJA® ZX™-14R ABS 30TH ANNIVERSARY

Kawasaki
Let the Good Times Roll®

PARTS LIST

Tires

ITEM NAME	PART NUMBER	QUANTITY

© 2026 Kawasaki Motors Corp., U.S.A.