2015 ZR800 (European)

PARTS DIAGRAM

Labels

F2860

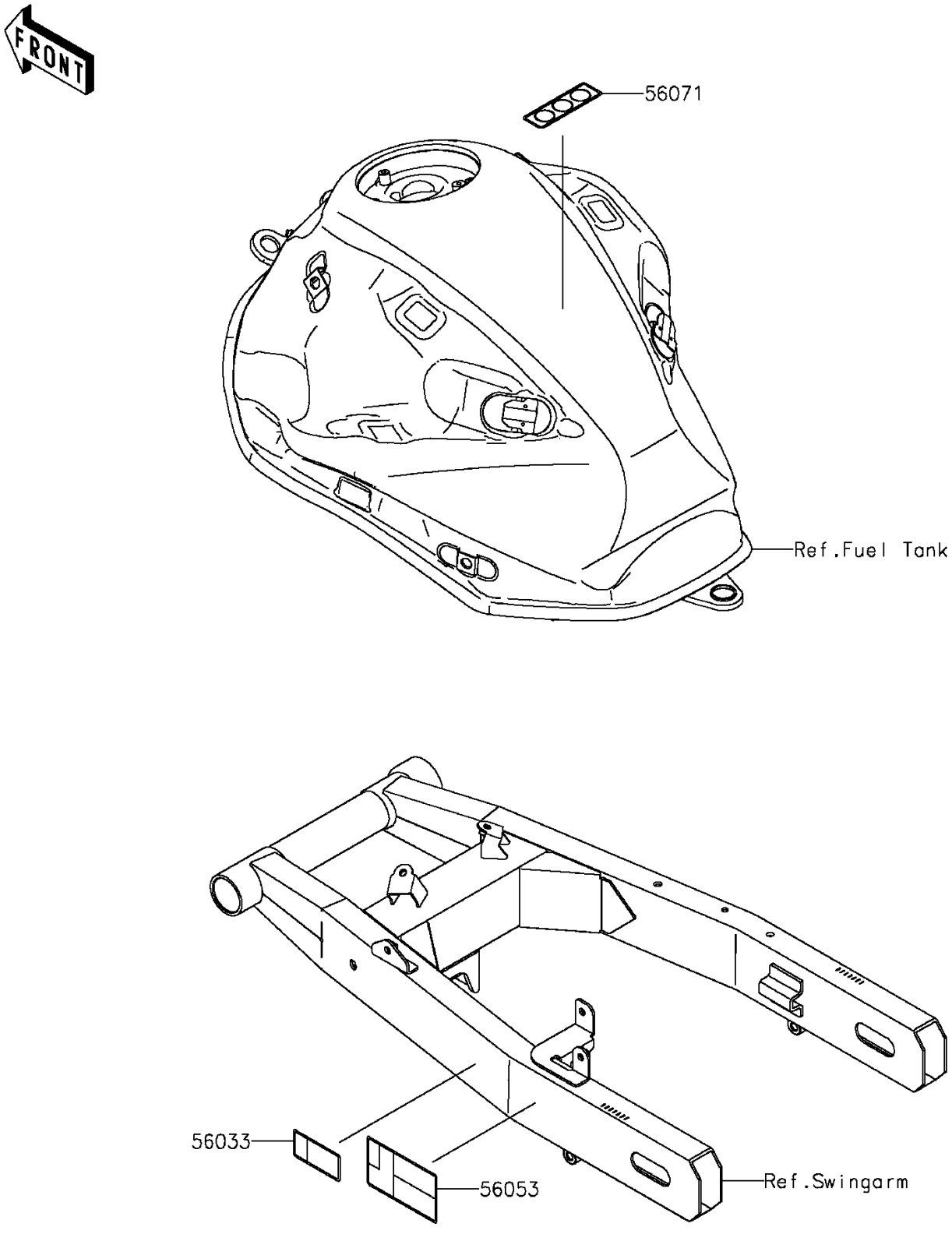

© 2026 Kawasaki Motors Corp., U.S.A.

2015 ZR800 (European)

PARTS LIST

Labels

ITEM NAME	PART NUMBER	QUANTITY

© 2026 Kawasaki Motors Corp., U.S.A.