2015 ZR800 (European)

PARTS DIAGRAM

Engine Mount

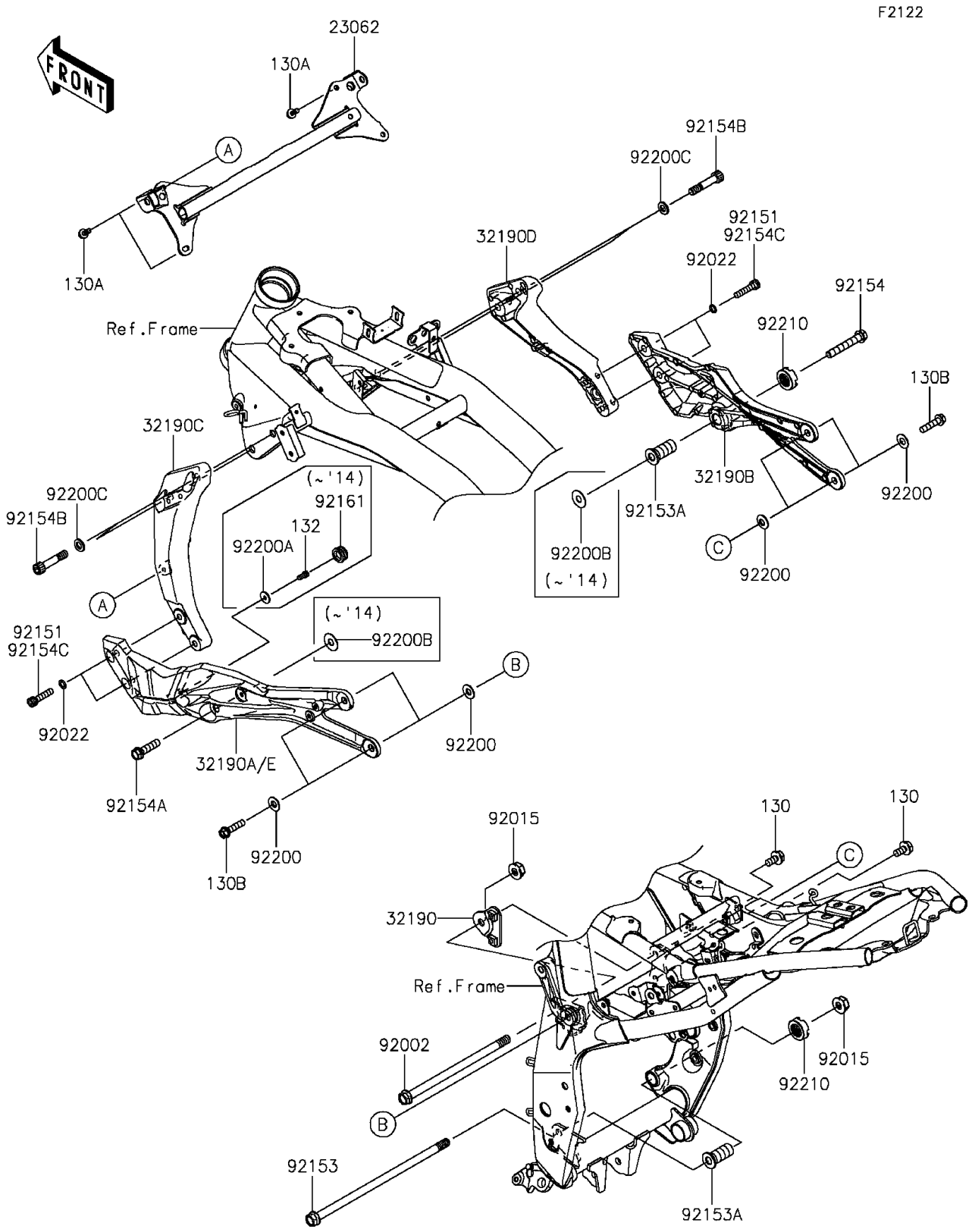

© 2026 Kawasaki Motors Corp., U.S.A.

2015 ZR800 (European)

PARTS LIST

Engine Mount

ITEM NAME	PART NUMBER	QUANTITY
BOLT-FLANGED,8X16 (Ref # 130)	130BB0816	2
BOLT-FLANGED,6X18 (Ref # 130A)	130CB0618	3
BOLT-FLANGED,8X35 (Ref # 130B)	130CB0835	4
BRACKET-COMP,ENGINE (Ref # 23062)	23062-0776	1
BRACKET-ENGINE,RR,RH,UPP (Ref # 32190)	32190-0603	1
BRACKET-ENGINE,RR,RH,F.S.BLACK (Ref # 32190B)	32190-0620-18R	1
BRACKET-ENGINE,FR,LH,F.S.BLACK (Ref # 32190C)	32190-0635-18R	1
BRACKET-ENGINE,FR,RH,F.S.BLACK (Ref # 32190D)	32190-0636-18R	1
BRACKET-ENGINE,RR,LH,F.S.BLACK (Ref # 32190E)	32190-0683-18R	1
BOLT,10X183 (Ref # 92002)	92002-1337	1
NUT,FLANGED,10MM (Ref # 92015)	92015-1180	2
WASHER,8.5X13X1 (Ref # 92022)	92022-1028	4
BOLT,FLANGED,10X240 (Ref # 92153)	92153-0559	1
BOLT,ENGINE MOUNT,18MM (Ref # 92153A)	92153-1098	2
BOLT,FLANGED,10X65 (Ref # 92154)	92154-0312	1
BOLT,FLANGED,10X40 (Ref # 92154A)	92154-0313	1
BOLT,SOCKET,10X50 (Ref # 92154B)	92154-0729	4
BOLT,SOCKET,8X35 (Ref # 92154C)	92154-1708	4
WASHER,10X22X3 (Ref # 92200)	92200-0832	8
WASHER,10.5X19X2.3 (Ref # 92200C)	92200-1042	4
NUT,18MM (Ref # 92210)	92210-1203	2

© 2026 Kawasaki Motors Corp., U.S.A.