# 2014 VULCAN® 900 CUSTOM

## PARTS DIAGRAM

### Suspension/Shock Absorber

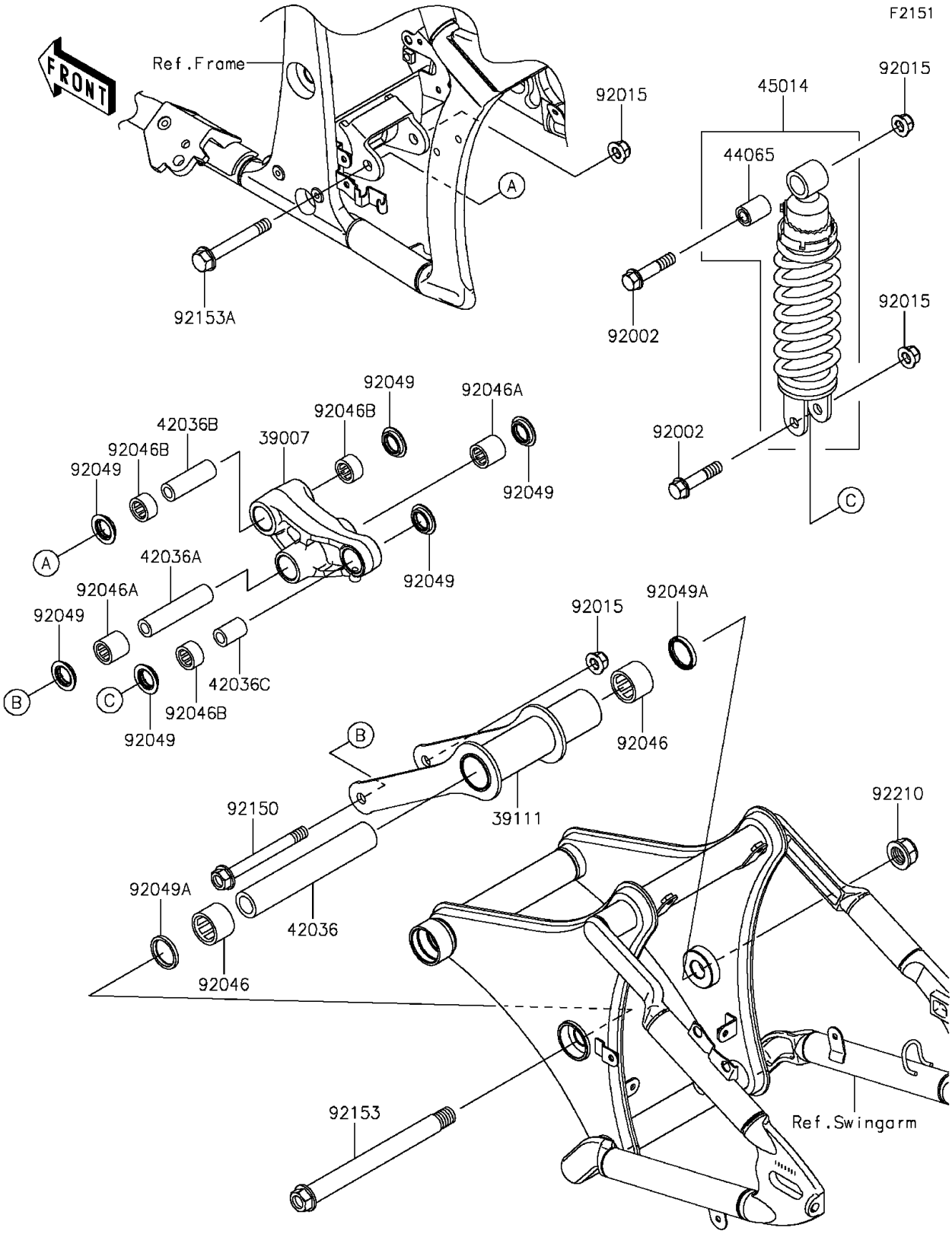


© 2026 Kawasaki Motors Corp., U.S.A.

# 2014 VULCAN® 900 CUSTOM

## PARTS LIST

### Suspension/Shock Absorber

| ITEM NAME | PART NUMBER | QUANTITY |
|---|---|---|

© 2026 Kawasaki Motors Corp., U.S.A.