2014 VULCAN® 900 CUSTOM

PARTS DIAGRAM

Suspension/Shock Absorber

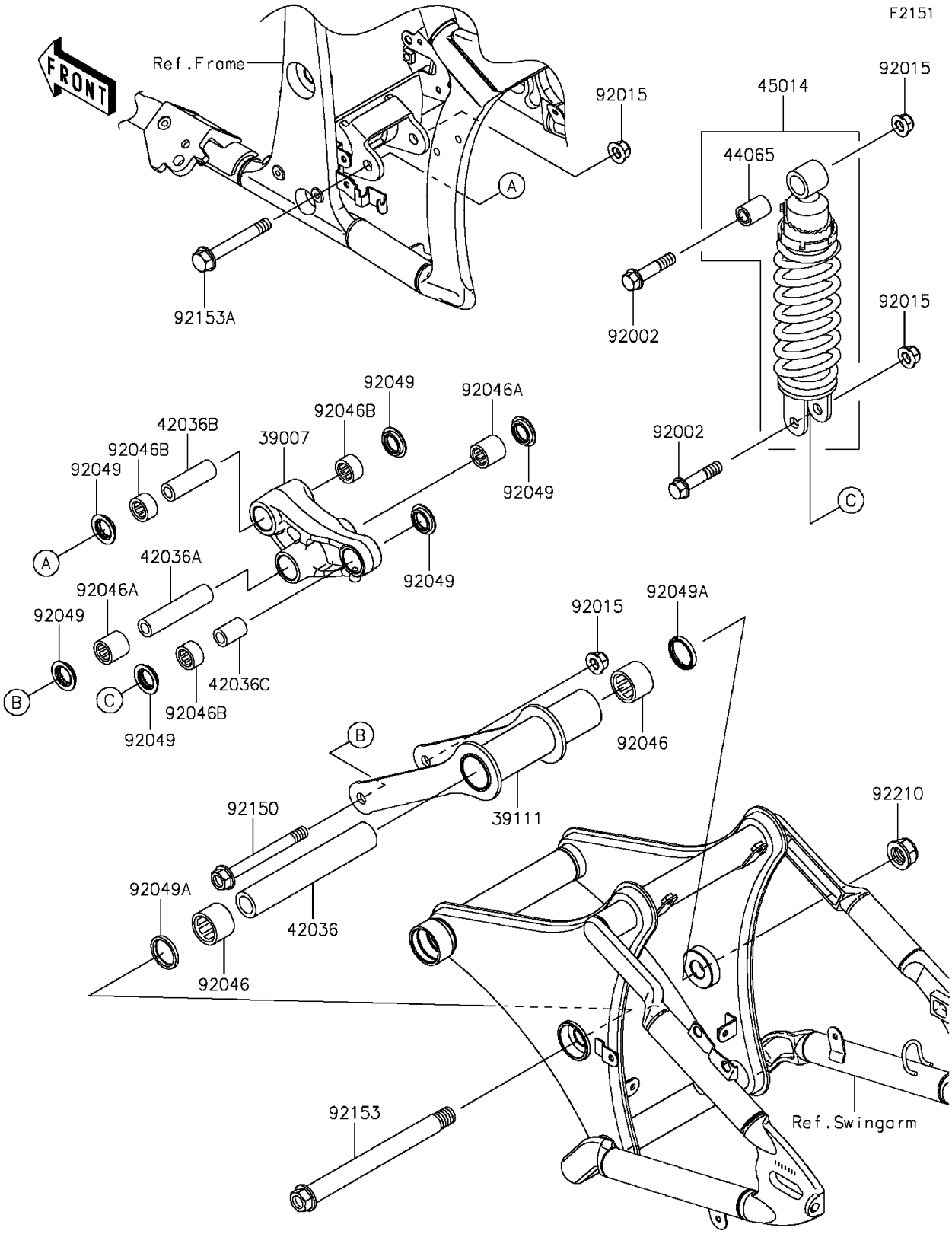

© 2026 Kawasaki Motors Corp., U.S.A.

2014 VULCAN® 900 CUSTOM

PARTS LIST

Suspension/Shock Absorber

ITEM NAME	PART NUMBER	QUANTITY

© 2026 Kawasaki Motors Corp., U.S.A.