2014 BRUTE FORCE® 750 4x4i

PARTS DIAGRAM

Fuel Tank

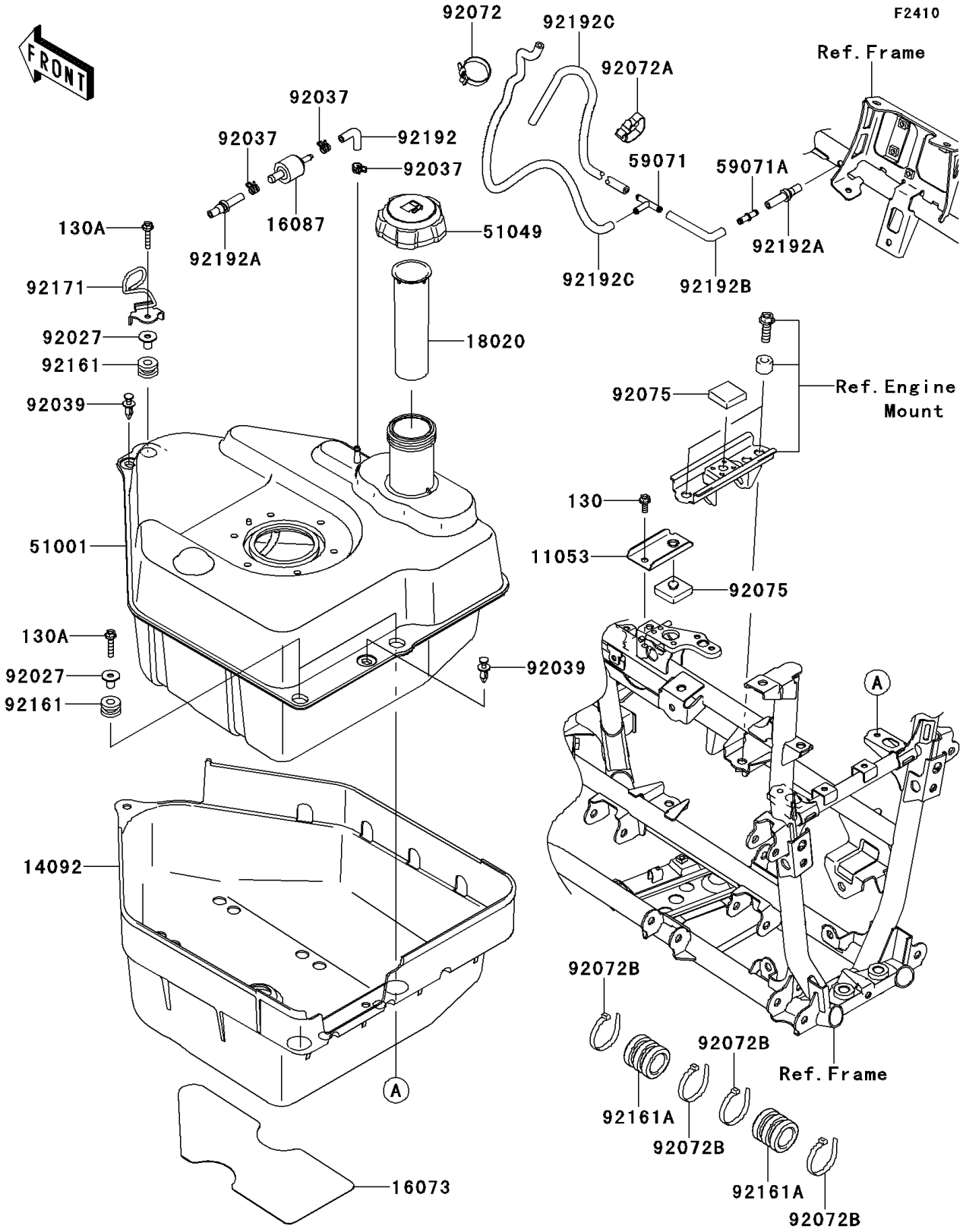

© 2026 Kawasaki Motors Corp., U.S.A.

2014 BRUTE FORCE® 750 4x4i

PARTS LIST

Fuel Tank

ITEM NAME	PART NUMBER	QUANTITY
BOLT-FLANGED,6X16 (Ref # 130)	130BA0616	1
BOLT-FLANGED,6X30 (Ref # 130A)	130BA0630	3
BRACKET,FUEL TANK,TOP (Ref # 11053)	11053-0936	1
COVER,FUEL TANK,LWR (Ref # 14092)	14092-0186	1
INSULATOR,FUEL TANK COVER,LWR (Ref # 16073)	16073-0034	1
VALVE-CHECK (Ref # 16087)	16087-0703	1
BAFFLE,FUEL TANK (Ref # 18020)	18020-0008	1
TANK-COMP-FUEL (Ref # 51001)	51001-0237	1
CAP-TANK,FUEL (Ref # 51049)	51049-1128	1
JOINT (Ref # 59071)	59071-3705	1
JOINT (Ref # 59071A)	59071-3717	1
COLLAR,L=16.1 (Ref # 92027)	92027-1847	3
CLAMP,TUBE (Ref # 92037)	92037-1461	3
RIVET (Ref # 92039)	92039-1229	2
BAND,L=149 (Ref # 92072)	92072-031	1
BAND,L=186 (Ref # 92072A)	92072-056	1
BAND,L=188 (Ref # 92072B)	92072-1239	4
DAMPER (Ref # 92075)	92075-1882	2
DAMPER (Ref # 92161)	92161-0106	3
DAMPER,FUEL TANK,RR (Ref # 92161A)	92161-1111	2
CLAMP,FUEL TUBE (Ref # 92171)	92171-1741	1
TUBE,FUEL TANK-CHECK VALVE (Ref # 92192)	92192-0067	1
TUBE,FRAME PIPE-CHECK VALVE (Ref # 92192A)	92192-0068	2
TUBE,5X10X80/22 (Ref # 92192B)	92192-0992	1
TUBE,5X10X470 (Ref # 92192C)	92192-0993	2

© 2026 Kawasaki Motors Corp., U.S.A.