2014 BRUTE FORCE® 750 4x4i

PARTS DIAGRAM

Shock Absorber(s)

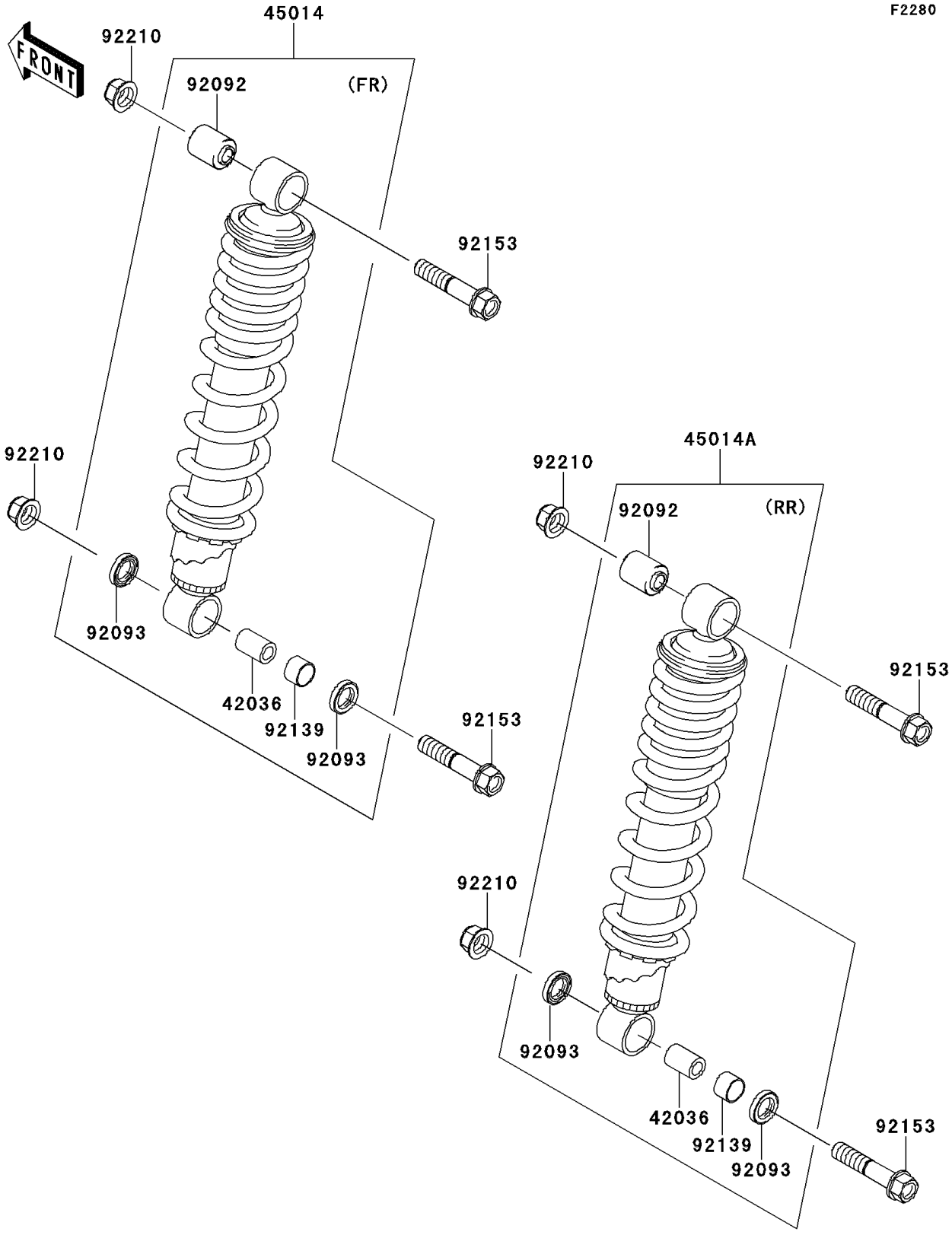

© 2026 Kawasaki Motors Corp., U.S.A.

2014 BRUTE FORCE® 750 4x4i

PARTS LIST

Shock Absorber(s)

ITEM NAME	PART NUMBER	QUANTITY
SLEEVE (Ref # 42036)	42036-0018	4
SHOCKABSORBER,FR,BLACK (Ref # 45014)	45014-0314-17D	2
SHOCKABSORBER,RR,BLACK (Ref # 45014A)	45014-0315-17D	2
BUSHING-RUBBER (Ref # 92092)	92092-0007	4
SEAL (Ref # 92093)	92093-0033	8
BUSHING (Ref # 92139)	92139-0084	4
BOLT,FLANGED,10X50 (Ref # 92153)	92153-1139	8
NUT,LOCK,FLANGED,10MM (Ref # 92210)	92210-0276	8

© 2026 Kawasaki Motors Corp., U.S.A.