2014 BRUTE FORCE® 750 4x4i

PARTS DIAGRAM

Rear Hub

F2240



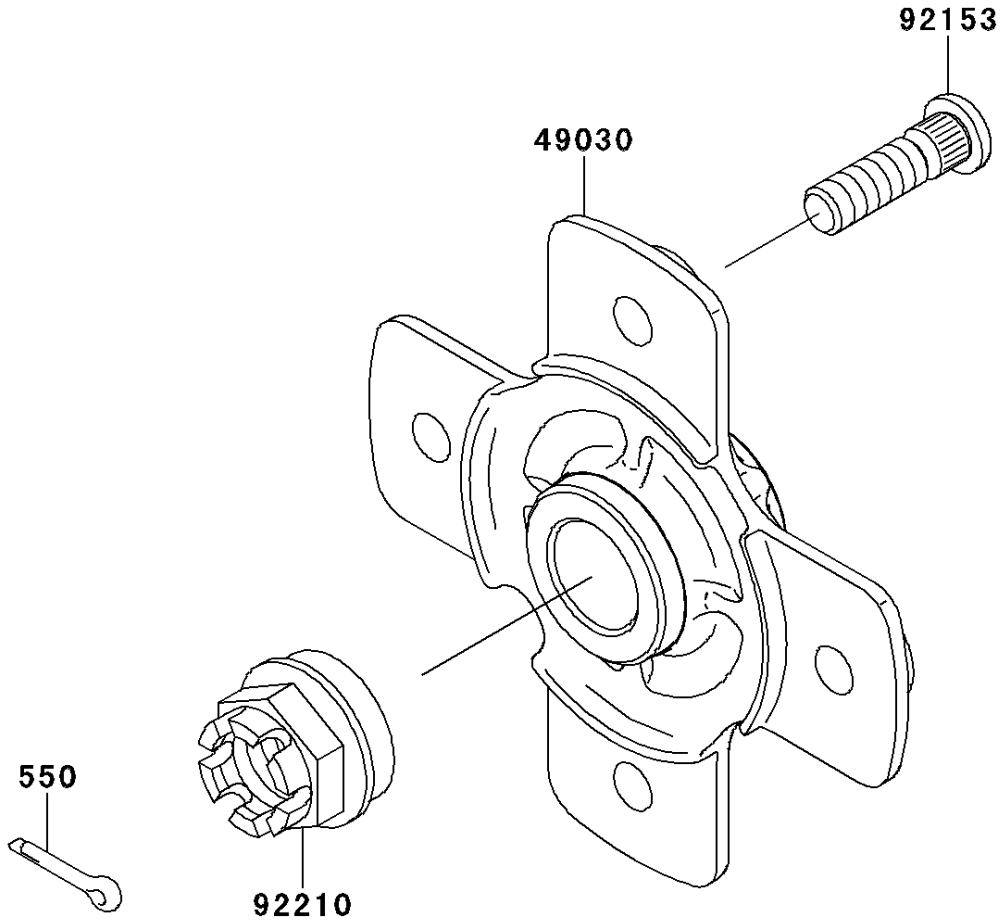

© 2026 Kawasaki Motors Corp., U.S.A.

2014 BRUTE FORCE® 750 4x4i

PARTS LIST

Rear Hub

ITEM NAME	PART NUMBER	QUANTITY
PIN-COTTER,4.0X25 (Ref # 550)	550AA4025	2
HUB,RR (Ref # 49030)	49030-0034	2
BOLT,10X36.5 (Ref # 92153)	92153-0890	8
NUT,CASTLE,20MM (Ref # 92210)	92210-1381	2

© 2026 Kawasaki Motors Corp., U.S.A.