2013 VULCAN® 900 CLASSIC LT

PARTS DIAGRAM

Headlight(s)

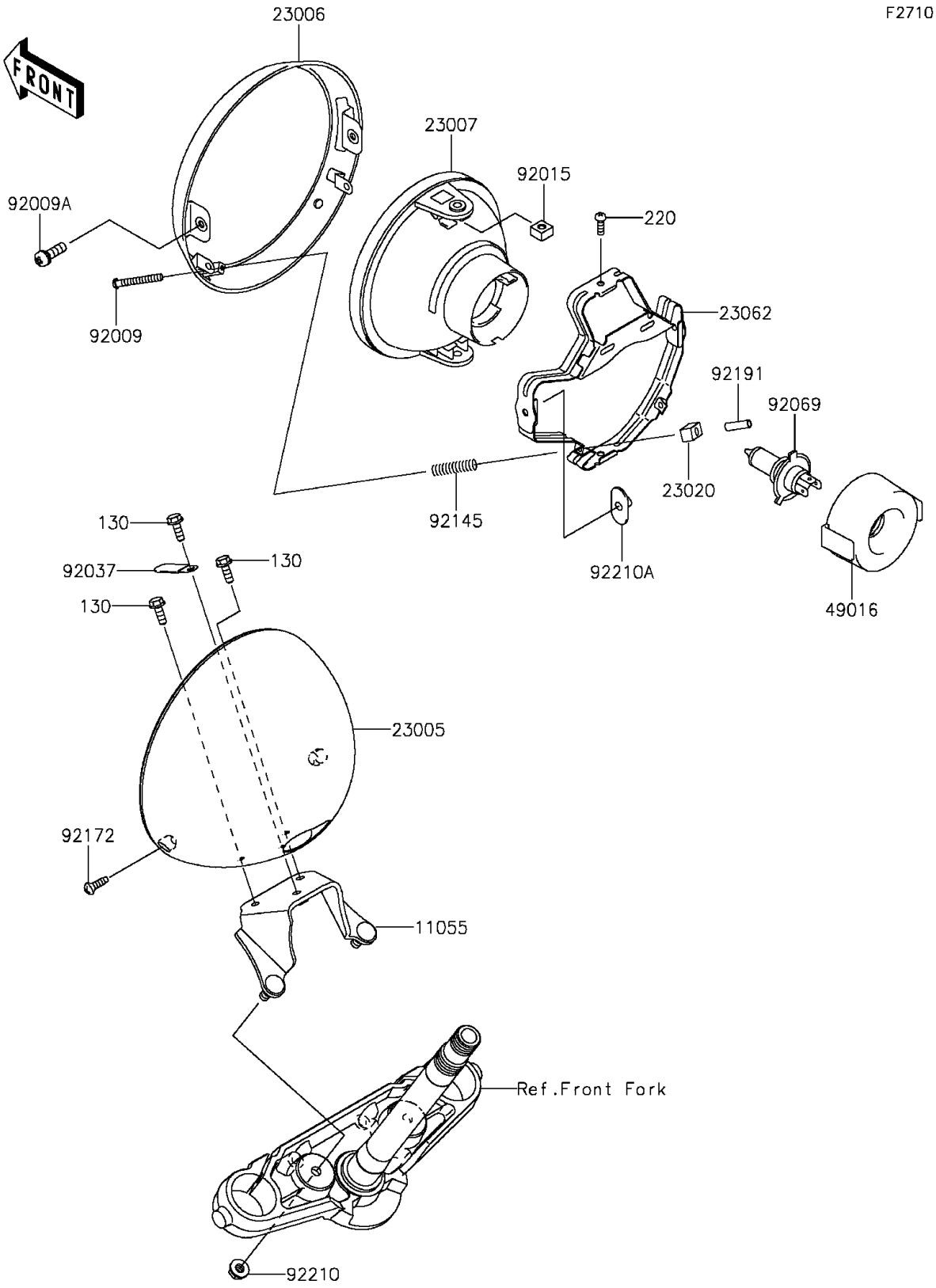

© 2026 Kawasaki Motors Corp., U.S.A.

2013 VULCAN® 900 CLASSIC LT

PARTS LIST

Headlight(s)

ITEM NAME	PART NUMBER	QUANTITY
BOLT-FLANGED,6X16 (Ref # 130)	130BA0616	3
SCREW-PAN-CROS,5X16 (Ref # 220)	220AA0516	2
BRACKET,HEAD LAMP,SILVER (Ref # 11055)	11055-1167-CE	1
BODY-COMP-HEAD LAMP (Ref # 23005)	23005-0304	1
RIM-LAMP (Ref # 23006)	23006-1081	1
LENS-COMP,HEAD LAMP (Ref # 23007)	23007-1396	1
NUT,4MM,FOCUS ADJUST (Ref # 23020)	23020-018	2
BRACKET-COMP,HEAD LAMP (Ref # 23062)	23062-1132	1
COVER-SEAL,SOCKET (Ref # 49016)	49016-1203	1
SCREW,FOCUS ADJUST,4X60 (Ref # 92009)	92009-1816	2
SCREW,5X16 (Ref # 92009A)	92009-1879	2
NUT,5MM (Ref # 92015)	92015-1157	2
CLAMP,L=45 (Ref # 92037)	92037-1539	1
BULB,12V 60/55W,H4 (Ref # 92069)	92069-0050	1
SPRING,HEAD LAMP LENS (Ref # 92145)	92145-1268	2
SCREW,5X14 (Ref # 92172)	92172-0145	2
TUBE,3.5X5.5X19 (Ref # 92191)	92191-1217	2
NUT,FLANGED,8MM (Ref # 92210)	92210-0004	2
NUT,SPECIAL,5MM (Ref # 92210A)	92210-1060	2

© 2026 Kawasaki Motors Corp., U.S.A.